DocuSign Envelope ID: FC20CC1D-27CE-4697-B47D-B02636483E86

Housing Authority of the City of Alameda

PHONE: (510) 747-4300
FAX: (510) 522-7848
TTY/TRS: 711

701 Atlantic Avenue • Alameda, California 94501-2161

REQUEST FOR PROPOSALS (RFP) FOR ANNE B. DIAMENT PLAZA EXTERIOR BALCONY REPAIRS

Issued: November 21, 2023

The Housing Authority of the City of Alameda
701 Atlantic Avenue
Alameda, CA 94501

DocuSign Envelope ID: FC20CC1D-27CE-4697-B47D-B02636483E86

TABLE OF CONTENTS

1.0 AHA'S RESERVATION OF RIGHTS 6

1.1. Right to Reject, Waive or Terminate the RFP 6
1.2. Right Not to Award 6
1.3. Right to Terminate 6
1.4. Right to Determine Time and Location 6
1.5. Right to Determine Financial Responsibility and Viability 6
1.6. Right to Retain Written Proposals 6
1.7. Right to Negotiate Fees 6
1.8. No Obligation to Compensate 6
1.9. Right to Amend Prior to Award 6
1.10. Right to Reject Any Proposal 8
1.11. Right to Prohibit Further Participation 7
1.12. Public Disclosure of Proposal Documents 8

2.0 GENERAL/ TECHNICAL SPECIFICATIONS 8

2.1. Proposed Term 8
2.2. Number of Proposers to be Selected 8
2.3. Funding 8
2.4. Federal Requirements 8
2.5. Form of Contract. 8
2.6. Submittal Deadline 9
2.7. Proposal Review 9
2.8. Award 9

3.0 SCOPE OF SERVICES 9

4.0 PROPOSAL FORMAT 9

4.1 Proposal Submittal 9
9
Part 2 - Form of Proposal 10
Part 3 - Profile of Proposer 10
Part 4 - Cover Letter 10
Part 5 - Qualifications and Experience: 10
Part 6 - Proposed Approach: 10
Part 7 - Customer Service: 11
Part 8 - Cost Analysis and Budget for Primary Services 11
Part 9 - References 13
Part 10-Other Company Information (Option) 10
Part 11 – Confirmation of submission of Conflict-of-Interest Form: 13
4.2. Organization of Submitted Materials 13
4.3. Submission Conditions 11
4.4. Submission Responsibilities 14
4.5. Supportive Documents 14
4.6. Proprietary Information 14
4.7. Eligible to Conduct Business in California 14
4.8. Proposer's Responsibilities--Contact with the AHA 14

DocuSign Envelope ID: FC20CC1D-27CE-4697-B47D-B02636483E86

4.9. Addenda *15*
4.10. Recap of Attachments *15*

5.0 PROPOSAL EVALUATION ***16***

5.1. Evaluation Factors. *16*
5.2. Evaluation Method. *17*

6.0 APPEALS ***17***

6.1. Submission *17*
....

6.2 Conflict of Interest *17*

7.0 CONTRACT AWARD ***17***

7.1. Contract Award Procedure *17*
7.2. Contract Conditions *18*
7.3. Right to Negotiate Final Fees *23*
7.4. Contract Service Standards *23*
7.5. Attachments *23*

DocuSign Envelope ID: FC20CC1D-27CE-4697-B47D-B02636483E86

INTRODUCTION

The Housing Authority of the City of Alameda ("AHA") is a public body corporate and politic that was formed in 1940 to provide housing assistance to low-income families within the City of Alameda. The AHA is headed by an Executive Director (ED) and is governed by a seven-person Board of Commissioners and is subject to the requirements of Title 24 of the Code of Federal Regulations ("CFR"), Housing Authorities Law (Part 2 of Division 24 of the California Health and Safety Code commencing with Section 34200 et seq.), other U.S. Department of Housing and Urban Development ("HUD") rules and regulations, and AHA's Procurement Policy.

The AHA has two affiliates, Alameda Affordable Housing Corporation (AAHC) and Island City Development (ICD) and several limited partnerships. Unless otherwise stated, this solicitation is for all AHA affiliated entities.

Currently, the AHA has an Annual Contributions Contract to administer 1885 tenant-based Housing Choice Vouchers, which includes 338 Project-Based Vouchers and allocations for the Family Unification Program (FUP), the Veterans Affairs Supportive Housing (VASH), the Non-Elderly Disabled (NED), and Family Self-Sufficiency (FSS) programs.

The AHA is also tasked with housing at least 14 Shelter-Plus Care Vouchers and 30 Moderate Rehabilitation households. The AHA does not operate any Public Housing units. The AHA currently owns units but is transitioning ownership of those approximately 570 units to the Alameda Affordable Housing Corporation (AAHC), an affiliate of the AHA. The AHA manages 251 units while the remainder of the portfolio with AHA and AAHC are managed by a 3rd-party management company. The AHA currently has approximately 55 employees.

The Housing Authority of the City of Alameda, in partnership with the entire community, advocates and provides quality, affordable, safe housing; encourages self-sufficiency; and strengthens community inclusiveness and diversity in housing.

The AHA is soliciting and accepting proposals from qualified, licensed, and insured consultants or companies, demonstrating their qualifications, past performance and interest for this work. The term "Proposer" used herein shall mean proposers, partnerships, corporations, associations, or professional organizations.

Details regarding this Request for Proposals, specifications, and submittal requirements are set forth in this RFP document and any attachments or amendments to it, which can also be accessed online at www.alamedahsg.org/working_with_us/business_opportunities. Proposals made in response to this solicitation must conform to all of the required specifications outlined within this document and any designated attachments or amendments in their entirety.

(Continued on Next Page)

DocuSign Envelope ID: FC20CC1D-27CE-4697-B47D-B02636483E86

RFP INFORMATION AT A GLANCE

AHA CONTACT PERSON ("RFP MANAGER" OR "RM"):	Joseph Nagel, Construction Project Manager E-MAIL: jnagel@alamedahsg.org PHONE: (510) 747-4340
HOW TO OBTAIN THE RFP DOCUMENTS:	ONLINE AT: WWW.ALAMEDAHSG.ORG/WORKING_WITH_US/BUSINESS_OPPORTUNITIES OR VIA E-MAIL FROM THE AHA CONTACT PERSON LISTED ABOVE.
DATE FOR MANDATORY BID WALK	**December 5, 2023, AT 1:00 P.M. @ Project Site Location - 920 Park St., Alameda, Ca. 94501**
DEADLINES FOR SUBMITTING QUESTIONS AND REQUEST FOR INTERPRETATIONS (RFI) INCLUDING ANY MODIFICATIONS TO AHA CONTRACT LANGUAGE OR SCOPE OF SERVICE:	**December 15, 2023, AT 4:00 P.M.** **RESPONSES TO QUESTIONS WILL BE POSTED ON THE AHA WEBSITE WITHIN THREE (3) BUSINESS DAYS.**
HOW TO FULLY RESPOND TO THIS RFP BY SUBMITTING A PROPOSAL:	PER INSTRUCTIONS WITHIN SECTION 4.0 OF THIS RFP DOCUMENT, SUBMIT ONE (1) ORIGINAL ELECTRONIC PROPOSAL TO THE AHA BY THE DUE DATE.
PROPOSAL SUBMITTAL RETURN LOCATION AND DEADLINE:	**January 10, 2023, AT 4:00 P.M.** PROPOSALS SHALL BE SUBMITTED ELECTRONICALLY BY THE DUE DATE TO jnagel@alamedahsg.org .
NOTE: AHA reserves the right to deviate from this timeline and/or modify the Scope of Service at any time.	**NOTICES OF ANY SUCH DECISIONS OR MODIFICATIONS WILL BE LOCATED AT:** WWW.ALAMEDAHSG.ORG/WORKING_WITH_US/BUSINESS_OPPORTUNITIES

DocuSign Envelope ID: FC20CC1D-27CE-4697-B47D-B02636483E86

1.0 AHA'S RESERVATION OF RIGHTS.

1.1. Right to Reject, Waive or Terminate the RFP. The AHA reserves the right to reject any or all proposals, to waive any informality in the RFP process, or to terminate the RFP process at any time, in its sole and absolute discretion, if deemed by the AHA to be in its best interests.

1.2. Right Not to Award. The AHA reserves the right not to award a contract pursuant to this RFP.

1.3. Right to Terminate. The AHA reserves the right to terminate a contract awarded pursuant to this RFP, at any time for its convenience upon 5 business day's written notice to the successful Proposer(s).

1.4. Right to Determine Time and Location. The AHA reserves the right to determine the days, hours and locations that the successful Proposer shall provide services called for in this RFP.

1.5. Right to Determine Financial Responsibility and Viability. The AHA reserves the right to require of each Proposer, information regarding financial responsibility and viability or such other information as the AHA determines is necessary to ascertain whether a proposal is in fact the lowest responsive and responsible proposal submitted.

1.6. Right to Retain Written Proposals. The AHA reserves the right to retain all written proposals submitted to AHA by all Proposers in response to this RFP, and not permit the withdrawal of same for a period of 60 calendar days subsequent to the deadline for receiving said proposals. The AHA may permit the withdrawal of proposals if requested in writing by the Proposer and such request is approved in writing by the RFP Manager for this RFP in his/her sole and absolute discretion.

1.7. Right to Negotiate Fees. The AHA reserves the right to negotiate the fees proposed by the successful Proposer.

1.8. No Obligation to Compensate. The AHA shall have no obligation to compensate any Proposer for any costs incurred in responding to this RFP.

1.9. Right to Amend Prior to Award. The AHA reserves the right to, prior to award, revise, change, alter or amend any of the instructions, terms, conditions, and/or specifications identified within the RFP documents issued, within any attachment or drawing, or within any addenda issued. All addenda will be posted on the AHA's website www.alamedahsg.org ("System"). Such changes that are issued before the bid submission deadline shall be binding upon all prospective bidders. AHA also reserves the right to amend the form of standard AHA contract any time prior to contract execution.

DocuSign Envelope ID: FC20CC1D-27CE-4697-B47D-B02636483E86

1.10. Right to Reject Any Proposal. The AHA reserves the right, in its sole discretion, to reject and not consider any proposal that does not meet the requirements of this RFP, including but not limited to untimely, or incomplete proposals or proposals offering alternate or non-requested services.

1.11. Right to Prohibit Further Participation. The AHA shall reserve the right, at any time during the RFP or contract process, to prohibit any further participation by a Proposer or reject any proposal submitted that does not conform to any of the requirements detailed herein. By accessing the System and downloading this document, each Proposer is thereby agreeing to abide by all terms and conditions listed within this document and within the System; provided however, in the event a Proposer disagrees with any of the terms contained in this RFP, a Proposer shall have the right to notify the RM in writing within 5 business days of the discovery of any item listed herein or of any item that is issued thereafter by the AHA and ask for clarification or revision. If the RM agrees, the clarification or revision can be addressed in an addendum. Failure to abide by this time frame shall relieve the AHA, but not the Proposer, of any responsibility pertaining to such issue.

1.12. Public Disclosure of Proposal Documents. To the extent applicable, documents submitted in connection with this RFP may be subject to disclosure pursuant to the California Public Records Act (California Government Code Section 6250 et seq.).

2.0 GENERAL/ TECHNICAL SPECIFICATIONS.

The Housing Authority of the City of Alameda (AHA) is seeking proposals from qualified Proposers to provide the services listed in the scope of work set forth in Exhibit “D”, attached hereto.

2.1. Proposed Term. AHA anticipates that the proposed term for the proposed service will be for a period of three (6) months.

2.2. Number of Proposers to be Selected. The AHA will choose one (1) or more successful Proposers to provide the services contemplated in this RFP.

2.3. Funding. The work to be performed upon successful award of this RFP will be funded with “Authority” funds.

2.4. Federal Requirements. The scope of work to be performed shall be subject to the Federal requirements set forth in Exhibit “F”, attached hereto.

2.5. Form of Contract. By responding to this RFP and submitting a proposal, the Proposer acknowledges and agrees that in connection with this RFP,

DocuSign Envelope ID: FC20CC1D-27CE-4697-B47D-B02636483E86

AHA may only execute a contract prepared by AHA, which is substantially approved as to form and substance by AHA. As provided further within Section 6.0 herein, the AHA WILL NOT normally execute the successful Proposer's contract form; the contract will **normally** be executed on the AHA's form only (please see Attachment B), and all specifications listed within the subject AHA contract will generally be the same specifications listed within the Scope of Services in Section 3.0. Any Proposer that does not feel that these listed specifications are reasonable or complete shall address such with the AHA in writing at the time Proposer submits its proposal in accordance with the posted submittal deadline. Once the proposal deadline has passed, the proposer cannot request additional changes. AHA may consider, in its sole discretion, all or a portion a Proposer's alternative contract form, provided such proposed alternative contract form is submitted to AHA as part of Proposer's timely proposal response.

2.6. Submittal Deadline. The AHA must receive proposals by **4:00 PM, Wednesday, January 10, 2023.** Proposals must be submitted via email to: jnagel@alamedahsg.org with a copy to smartinez@alamedahsg.org . Proposals submitted after the deadline indicated above and/or via an alternate delivery method other than email will not be accepted.

2.7. Proposal Review. The Evaluation Committee, appointed by AHA's Executive Director or designee, will review, evaluate, rank, and select the proposals according to the scoring criteria outlined in the RFP, AHA's Procurement Policy, and HUD regulations.

2.8. Award. Proposals that meet the requirements outlined in this RFP will be evaluated and ranked according to the rating and selection factors described in Section 5 below. A ranking list will be prepared according to points awarded to each proposal. The proposal scoring the highest points will be conditionally awarded the contract, pending AHA Board of Commissioners approval, if required. AHA may, in its sole and absolute discretion, select none of the proposals submitted. AHA reserves the right to postpone or cancel the final award of the proposals at its convenience.

3.0 SCOPE OF SERVICES.

All Proposers are asked to describe the tasks required to successfully carry out either one or both of the Scope of Services outlined in Exhibit “D”, attached hereto. However, Proposer’s may include additional services that the Proposer is capable of providing and which, in the Proposer’s opinion, would enhance the implementation of the proposed Scope of Services. Proposers must provide pricing for any additional services presented in the proposal. Pricing for all five (5) years must be included in the proposal, including any increases, broken down by year.

DocuSign Envelope ID: FC20CC1D-27CE-4697-B47D-B02636483E86

4.0 PROPOSAL FORMAT.

4.1. Proposal Submittal. All proposals submitted in response to this RFP must be formatted in accordance with the numbered sequence noted below. None of the proposed services may conflict with any requirement the AHA has published herein or has issued by addendum. Each proposal should include sections addressing the following information in the order shown. The Proposer should be sure to include all information that it feels will enable the Evaluation Committee to make a decision. Failure of the Proposer to provide specific, detailed information may result in its proposal being rejected in favor of a sufficiently detailed proposal. Any necessary exhibits or other information, including information not specifically requested by this RFP but that the Proposer believes would be helpful, should be attached at the end of the proposal. The party submitting the materials should keep in mind the limitations on confidential information described in Subsection 1.12.

Part 1 - Proposal Submittal Checklist:

The Form of Proposal Submittal Checklist is attached as Attachment A to this RFP and incorporated herein by this reference. This one-page form must be fully completed, executed where provided thereon and submitted under this section as a part of the proposal submittal.

Part 2 – Form of Proposal:

The Form of Proposal is attached as Attachment B to this RFP and incorporated herein by this reference. This one-page form must be fully completed, executed where provided thereon and submitted under this section as a part of the proposal submittal.

Part 3 – Profile of Proposer:

The Form of Profile of Proposer is attached as Attachment C to this RFP and incorporated herein by this reference. This 3-page form must be fully completed, executed, and submitted under this section as a part of the proposal submittal.

Part 4 – Cover Letter:

Provide a one-page cover letter on your letterhead that includes the address, telephone numbers, and e-mail address of the Proposer's contact person or persons. List the name and title of each person authorized to represent the Proposer in negotiations.

Part 5 – Qualifications and Experience:

Provide a statement of qualifications for your organization, a statement of the size of Proposer, a description of services provided by your

DocuSign Envelope ID: FC20CC1D-27CE-4697-B47D-B02636483E86

organization, and a statement of the extent of experience/history providing the services requested by this RFP.

1. How many full-time employees (FTEs) do you plan to assign to this project if you are selected?

2. How many people in total are employed by your company? Delineate between employees and consultants.

3. If applicable, submit a resume or curriculum vitae for each such individual if the resume/CV includes all the requested information.

Part 6 – Proposed Approach:

This section describes your proposed approach for meeting the Scope of Services required, as listed above. Relevant considerations include the quality and feasibility of your approach to meeting these needs, the manner in which you plan to provide adequate staffing (if applicable), and equipment or other resources provided by you (if applicable). Keep these considerations in mind as you respond to the following:

1. Describe how you will fulfill the needs described in this RFP. Attach a project plan, if appropriate.

2. Identify how you will meet all other aspects of the Scope of Services and related requirements stated above. List any items that you cannot provide.

Part 7 – Customer Service:

1. In the event of a problem, who is to be contacted within your organization?

2. In the event of the identification of a problem by the AHA, describe how you will address such problems and the timeframe for addressing them.

Part 8 – Cost Analysis and Budget for Primary Services:

1. Provide an itemized budget and a detailed explanation for all costs associated with providing the requested services, including but not limited to:

    A. Itemize and provide a proposal of costs detailed in Attachment D the Scope of Services.

DocuSign Envelope ID: FC20CC1D-27CE-4697-B47D-B02636483E86

B. Is travel time to other required locations expected to be billable? If so, how will travel time invoices be calculated? Generally, proposals that do not include travel time or expenses are preferred unless the services requested require travel as part of the service. Travel must be in compliance with AHA's Travel procedures, included as Attachment F.

C. Include start-up costs, if any.

Part 9 – References:

List at least three (3) business references for which you have recently provided similar services. Include contact names, titles, phone numbers and e-mail addresses for all references provided.

Part 10 – Other Company Information (Optional):

Part 11 – Conflict of Interest Information

Proposer must include confirmation of submission of online form. Form can be found at: https://form.alamedahsg.org/Forms/A4Gpo.

If no information is to be placed under any of the above noted Sections (especially the "Optional" section), please place thereunder a statement such as "NO INFORMATION IS BEING PLACED UNDER THIS SECTION" or "THIS SECTION LEFT INTENTIONALLY BLANK." DO NOT eliminate any of the sections.

Unless the Proposer is an individual, all proposals must be signed with a proposer/company/partnership/entity name and by a responsible officer or employee indicating that officer or employee's authorization to commit the Proposer to the terms of the proposal. Obligations assumed by such signature must be fulfilled.

4.2 Organization of Submitted Materials. Proposers must submit one (1) original electronic proposal via email with the following guidelines**:** All proposals must be submitted electronically by the designated due date to jnagel@alamedahsg.org with a copy to smartinez@alamedahsg.org . The subject line must denote the following: "PMRFP11212023**".** The body of the e-mail must have the Proposer's name and return address. Proposals received after the published deadline will not be accepted.

DocuSign Envelope ID: FC20CC1D-27CE-4697-B47D-B02636483E86

4.3. Submission Conditions. Proposers are not allowed to change any requirements or forms contained herein, either by making or entering onto these documents or the documents submitted any revisions or additions; and if any such additional marks, notations or requirements are entered on any of the document that are submitted to the AHA by the Proposer, such may invalidate that proposal. If, after accepting such a proposal, the AHA decides that any such entry has not changed the intent of the proposal that the AHA intended to receive, the AHA may accept the proposal and the proposal shall be considered by the AHA as if those additional marks, notations or requirements were not entered on such. By accessing the noted System, registering and downloading these documents, each prospective Proposer that does so is thereby agreeing to confirm all notices that the AHA delivers to them as instructed, and by submitting a proposal, the Proposer is thereby agreeing to abide by all terms and conditions published herein and by addendum pertaining to this RFP.

4.4. Submission Responsibilities. It shall be the responsibility of each Proposer to be aware of and to abide by all dates, times, conditions, requirements, and specifications set forth within all applicable documents issued by the AHA, including but not limited to this RFP. By virtue of completing, signing, and submitting the completed documents, the Proposer is stating their agreement to comply with all conditions and requirements set forth within the aforementioned documents.

4.5. Supportive Documents. By signing the Proposal Submittal Checklist form attached hereto as Attachment A, the Proposer is affirming that they agree to provide any documentation requested by the AHA upon notification of award under this RFP to ensure compliance with applicable requirements. Proposers may be asked to submit additional information to help facilitate the proposal review. If the AHA finds that a proposal is non-responsive or non-compliant with this RFP, written selection criteria and/or procedures, or applicable regulations, it will be rejected and returned to the Proposer with notification stating the reason for rejection. The AHA reserves the right to reject proposals at any time for misinformation, errors, or omissions of any kind, no matter how far they have been processed, in its sole and absolute discretion.

DocuSign Envelope ID: FC20CC1D-27CE-4697-B47D-B02636483E86

4.6. Proprietary Information. To the extent not prohibited by applicable law, if a Proposer does not desire certain proprietary information in their proposal disclosed, the Proposer is required to identify all proprietary information in the proposal, which identification shall be submitted concurrently with the proposal. If the Proposer fails to identify its proprietary information, it agrees by submission of its proposal that those sections shall be deemed non-proprietary and may be made available upon public request after a contract award. Notwithstanding anything to the contrary contained herein, any proposals and documents received in connection with this RFP may be subject to disclosure pursuant to the California Public Records Act (Government Code Section 6250 et seq.)

4.7. Eligible to Conduct Business in California.: All proposers shall be eligible to conduct business in the State of California and City of Alameda.

4.8. Proposer's Responsibilities--Contact with the AHA: It is the responsibility of the Proposer to address <u>all communication and correspondence pertaining to this RFP process to the RM only</u>. Proposers must not make inquiry or communicate with any other AHA staff member or official (including members of the Board of Commissioners) pertaining to this RFP. Failure to abide by this requirement may be cause for the AHA to not consider a proposal submittal received from any Proposer who may has not abided by this directive.

4.9. Addenda: All questions and requests for information must be addressed in writing to the RM. The RM will respond to all such inquiries in writing by addendum to all prospective Proposers (i.e., proposers or individuals that have obtained the RFP Documents). During the RFP solicitation process, AHA staff will NOT conduct any *ex parte* (a substantive conversation, “substantive” meaning, when decisions pertaining to the RFP are made, between the AHA and a prospective Proposer when other prospective Proposers are not present) conversations that may give one prospective Proposer an advantage over other prospective Proposers.

DocuSign Envelope ID: FC20CC1D-27CE-4697-B47D-B02636483E86

4.10. Recap of Attachments and Exhibits. It is the responsibility of each Proposer to verify that they have downloaded the following attachments and exhibits pertaining to this RFP, each of which are hereby incorporated herein by this reference:

Attachment /Exhibit	Description
A	Proposal Submittal Checklist
B	Form of Proposal
C	Form of Profile of Proposer
D	Scope of Services
E	Sample AHA Contract (Note: This contract is being given as a sample only. AHA reserves the right to revise any clause herein and/or to include within the ensuing contract any additional clauses that are in its best interests)
F	Travel Accommodations Expense Requirements-Consultants
G	Additional Federal Requirements
H	If HUD funded, the HUD Forms 5369-A (Certification and Representation of Offerors Non-Construction), 5369-B (Instructions to Offerors Non-Construction) / [5369 Instructions for Bidders for Contracts (Construction)}
I	Conflict of Interest Information

DocuSign Envelope ID: FC20CC1D-27CE-4697-B47D-B02636483E86

5.0 PROPOSAL EVALUATION.

5.1. Evaluation Factors. The following factors will be utilized by the AHA to evaluate each proposal received; award of points for each listed factor will be based upon the documentation that the Proposer submits within their proposal:

A. **Qualifications and Experience:**

Maximum Points: 30

As indicated under Part 5, the Proposer's qualifications and prior experience, including capability and experience of its key personnel, including their resumes and history of successfully performing similar services for public or private agencies.

B. **Proposed Approach:**

Maximum Points: 25

As indicated under Part 6, the Proposer's proposed approach to conducting the Scope of Work as noted in Attachment D, including clarity of understanding of the scope of services to be provided and appropriateness of the proposed solution/services, as well as the ability to meet any required timelines or other requirements. The ability to commence work within 30 calendar days of accepting the contract and completing the work no later than 98 working days after commencing the work is preferred.

C. **Customer Service:**

Maximum Points: 10

As indicated under Part 7, the Proposer's approach to customer service and coordination with the AHA.

D. **Cost Analysis and Budget for Primary Services:**

Maximum Points: 10

As indicated under Part 8, the Proposer's itemized budget and a detailed explanation for all costs associated with providing the requested services and an itemized proposal of costs.

DocuSign Envelope ID: FC20CC1D-27CE-4697-B47D-B02636483E86

E. **References:**

Maximum Points: 10

As indicated under Part 9, a comprehensive list of the Proposer's references for other public and private entities that it has provided these same or similar services, and that AHA may contact, the result of which will be verified and scored accordingly by the AHA.

F. **Lowest Overall Price:**
Maximum Points: 15

The Proposer with the lowest overall cost for the primary services described by this RFP will receive the maximum amount of points and the next highest Proposers will each receive a percentage thereafter.

5.2. Evaluation Method.

A. **Initial Evaluation for Responsiveness.** Each proposal received will first be evaluated for responsiveness (e.g., meets the minimum of the published requirements). The AHA reserves the right to reject any proposals deemed by the AHA not minimally responsive (the AHA will notify such proposers in writing of any such rejection).

B. **Evaluation Packet for Proposals Deemed Responsive:** Internally, an evaluation packet will be prepared for each evaluator, including the following documents: Score Sheet for each Proposer and a copy of all pertinent RFP documents.

C. **Evaluation Committee:** The AHA anticipates that the AHA's Executive Director or designee will select a minimum of a three-person committee to evaluate each of the responsive proposals submitted in response to this RFP ("Evaluation Committee"). PLEASE NOTE: No Proposer shall be informed at any time during or after the RFP process as to the identity of any Evaluation Committee member. If, by chance, a Proposer does become aware of the identity of such person(s), he/she SHALL NOT make any attempt to contact or discuss with such person anything related to this RFP. As detailed within this RFP, the designated RM is the only person at the AHA that the Proposers shall contact pertaining to this RFP. Failure to abide by this requirement may cause such Proposer(s) to be eliminated from consideration for award.

DocuSign Envelope ID: FC20CC1D-27CE-4697-B47D-B02636483E86

D. **Evaluation:** The selection criteria set forth in Section 5.1 herein will be used by AHA to rank and select proposals for this RFP. Each criterion is comprised of several components with an associated point value. The total points awarded to a proposal will be the aggregate of the component subtotals for each factor. This selection provides both a summary and details of the factors and point values.

E. **Potential "Competitive Range" or "Best and Finals" Negotiations:** The AHA reserves the right to, as detailed within Section 7.2.N through Section 7.2.R of HUD Procurement Handbook 7460.8 REV 2 ("HUD Procurement Handbook"), conduct a "Best and Finals" Negotiation, which may include oral interviews, with all proposers deemed to be in the competitive range. Any proposer deemed not to be in the competitive range shall be notified of such in writing by the AHA in a timely manner as possible, but in any case, no longer than 5 days after the beginning of such negotiations with the proposers deemed to be in the competitive range. The HUD Procurement Handbook can be accessed at https://www.hud.gov/program_offices/administration/hudclips/handbooks/pihh/74608.

F. **Ties/Equal Bids:** In the case of a tie in points awarded, the award shall be decided as detailed within Section 6.12.C of HUD Procurement Handbook 7460.8 REV 2, by "drawing lots or other random means of selection."

G. **Results of Evaluation:** Once an award is made, Proposers may request via e-mail additional information regarding the results. Requests for records are limited to those that are not privileged or confidential (i.e., no successful bidder trade secrets, financials, etcetera.)

H. **Proposal Protest:** Any prospective or actual Proposer, who is allegedly aggrieved in connection with the solicitation of a proposal or award of a contract, shall have the right to protest. To be eligible to file a protest with the AHA pertaining to an RFP or contract, the alleged aggrieved protestant must have been involved in the RFP process in some manner as a prospective proposer (e.g., submitted an interest form, proposal, or questions, or attended a pre-bid meeting) when the alleged situation occurred. The alleged aggrieved protestant must file, in writing, to AHA the exact reason for the protest, attaching any supportive data. The protestant must state within the written protest document specifically (not by inference) what action by the AHA or condition is being protested as inequitable, making where appropriate specific reference to the

DocuSign Envelope ID: FC20CC1D-27CE-4697-B47D-B02636483E86

RFP documents issued and including the specific citation of law, rule, regulation, or procedure upon which the protest is based. The protest document must also state the corrective action requested. Failure by the alleged aggrieved protestant to fully submit such information shall relieve AHA from any responsibility to take any corrective action, and as a result of noncompliance, the appeal will be dismissed without further review. The AHA has no obligation to consider a protest filed by any party that does not meet these criteria. Any protest against a solicitation must be received before the due date for the receipt of proposals, and any protest against the award of a contract must be received within ten (10) calendar days after the successful Proposer receives notice of the contract award, or the protest will not be considered. All proposal protests shall be in writing, submitted to the RFP Manager or designee. The AHA's Executive Director, or designee, shall issue a written decision on the matter. The AHA's Executive Director, or designee, may, at his/her sole discretion, suspend the procurement pending resolution of the protest if the facts presented so warrant. All appeals shall be submitted as outlined in Section 6.0.

6.1 APPEALS

6.2 **Submission**. All appeals shall be marked as follows and sent via e-mail the address listed below.

SUBJECT LINE: "APPEAL OF RFP PMRFP11212023"
EMAIL TO: jnagel@alamedahsg.org with a copy to smartinez@alamedahsg.org .

6.3 **Conflict of Interest**. All persons having familial (including in-laws) and/or employment relationships (past or current) with principals and/or employees of a Proposer entity will be excluded from participation on the AHA Evaluation Committee. Similarly, all persons having ownership interest in and/or who contract with a Proposer entity will be excluded from participation on the AHA Evaluation Committee.

7.0 CONTRACT AWARD.

7.1. **Contract Award Procedure.** If a contract is awarded pursuant to this RFP, the following detailed procedures will be followed:

By completing, executing and submitting the Form of Proposal (Attachment B), the Proposer is thereby agreeing to abide by all terms and conditions pertaining to this RFP as issued by the AHA, in hard copy, including an agreement to execute the standard AHA contract form. Accordingly, the AHA has no responsibility to conduct after the submittal deadline any negotiations pertaining to the contract clauses contained therein. In

DocuSign Envelope ID: FC20CC1D-27CE-4697-B47D-B02636483E86

addition, the AHA shall not negotiate any clauses contained within any applicable HUD documents.

Depending on the amount of the award, the AHA will forward the contract or a summary to AHA's Board of Commissioners for review and approval/disapproval, in their sole and absolute discretion, prior to signing the contract with the selected Proposer.

The contract shall be awarded subject to a resolution or minute order to that effect duly adopted by the Board of Commissioners, in their sole and absolute discretion, if approval is needed. Execution of the contract documents shall constitute a written memorial thereof.

If the amount of award does not require review or approval by the AHA's Board of Commissioners, then the contract will be executed by the Executive Director or Designee.

7.2. **Contract Conditions**. The following provisions are considered mandatory conditions of any contract award made by the AHA pursuant to this RFP:

A. **Contract Form:** The AHA will not normally execute a contract on the successful Proposer's form (see Section 2.5). Contracts will only be executed on the AHA's form (please see the Sample Contract under Attachment E), and by submitting a proposal the successful Proposer agrees to do so (please note that the AHA reserves the right to amend the AHA Sample Contract form as the AHA deems necessary). **Please note that the AHA has no legal right or ability to (and will not) at any time negotiate any clauses contained within ANY of the HUD forms included as a part of this RFP.**

B. **Assignment of Personnel:** The AHA shall retain the right to demand and receive a change in personnel assigned to the work performed pursuant to this RFP and the contract if the AHA believes that such change is in the best interest of the AHA and the completion of the contracted work.

C. **Unauthorized Sub-Contracting Prohibited:** The successful Proposer shall not assign any right, nor delegate any duty for the work proposed pursuant to this RFP (including, but not limited to, selling or transferring the contract) without the prior written consent of AHA's Executive Director or designee, in his/her sole and absolute discretion. Any purported assignment of interest or delegation of duty, without the prior written consent of AHA's Executive Director or designee, shall be void and may result in the cancellation of the contract with the AHA, or may result in the full or partial forfeiture of funds paid to the successful Proposer as a result

DocuSign Envelope ID: FC20CC1D-27CE-4697-B47D-B02636483E86

of the proposed contract; as determined by AHA's Executive Director or designee, in his/her sole and absolute discretion.

D. **Contract Period:** The AHA anticipates that it will initially award a contract for the period of three (3) years with the option, at the AHA's discretion, of two (2) additional one-year option periods, for a maximum total of five (5) years.

E. **Insurance Requirements:** Prior to any individual contract award (but not as a **part** of the proposal submission) the successful Proposer will be required to provide the following during the term of the contract:

(1) **Insurance**: Consultant shall procure and maintain for the duration of the contract, insurance against claims for injuries to persons or damages to property which may arise from or in connection with the performance of the work hereunder and the results of that work by the Consultant, its agents, representatives, employees, or subcontractors.

i. **Commercial General Liability (CGL):** Insurance Services Office Form CG 00 01 covering CGL on an "occurrence" basis, including products and completed operations, property damage, bodily injury, and personal and advertising injury with limits no less than $1,000,000 per occurrence. If a general aggregate limit applies, either the general aggregate limit shall apply separately to this project/location (ISO CG 25 03 or 25 04) or the general aggregate limit shall be twice the required occurrence limit. For consultants interacting with the public or with tenants, coverage must include coverage for discrimination, harassment, and fair housing claims under DFEH and HUD.

ii. **Automobile Liability:** ISO Form Number CA 00 01 coverage any auto (Code 1), or if Consultant has no owned autos, hired (Code 8) and non-owned autos (Code 9) with limit no less than $1 million for bodily injury and property damage. This requirement does not apply if no motor vehicles are used in providing services under the contract.

iii. **Workers' Compensation:** As required by the State of California, with Statutory Limits and Employers' Liability Insurance with limit of no less than $1,000,000 per accident for bodily injury or disease. This requirement does not apply to sole proprietors.

DocuSign Envelope ID: FC20CC1D-27CE-4697-B47D-B02636483E86

iv. **Professional Liability (Errors and Omissions):** Insurance appropriate to the Consultant's profession, with limit no less than $1,000,000 per occurrence or claim, $2,000,000 in the aggregate. For consultants interacting with the public or with tenants, coverage must include coverage against discrimination, harassment, and fair housing claims under DFEH and HUD. If cover age is provided on a claims-made basis, the retroactive date must be shown and must be before the date of the contract or the beginning of the contract work; insurance must be maintained, and evidence of coverage must be provided for at least five (5) years after completion of the contract of work. If coverage is cancelled or non-renewed, and not replaced with another claims-made policy form with a retroactive date prior to the contract effective date, the Contractor must purchase "extended reporting" coverage for a minimum of five (5) years after completion of work.

v. **IF APPLICABLE: Cyber Liability Insurance:** Coverage is required if the vendor/consultant is accessing, collecting, storing, or transferring Personally identifiable Information or medical information on staff, tenant, applicants etc.). Coverage shall be sufficiently broad to respond to the duties and obligations as is undertaken by Vendor in this agreement and shall include, but not be limited to, claims involving security breach, system failure, data recovery, business interruption, cyber extortion, social engineering, infringement of intellectual property, including but not limited to infringement of copyright, trademark, trade dress, invasion of privacy violations, information theft, damage to or destruction of electronic information, release of private information, and alteration of electronic information. The policy shall provide coverage for breach response costs, regulatory fines, and penalties as well as credit monitoring expenses with limits not less than $1,000,000 per occurrence or claim, $2,000,000 aggregate. This requirement does not apply if the consultant will not be accessing or storing AHA data subject to privacy regulations under Federal or state law, including but not limited to PII, PCI, and PHI, providing software, or accessing AHA information technology systems.

DocuSign Envelope ID: FC20CC1D-27CE-4697-B47D-B02636483E86

vi. **IF APPLICABLE: Technology Professional Liability:** Coverage is required if the vendor/consultant is providing software or technology services (data storage, website design, etc.). Coverage shall be sufficiently broad to respond to the duties and obligations as is undertaken by Consultant in this agreement and shall include, but not be limited to, claims involving media liability and infringement of intellectual property, including but not limited to infringement of copyright, trademark, trade dress, security and privacy liability that include invasion of privacy violations, information theft, damage to or destruction of electronic information, release of private information, alteration of electronic information, extortion and network security. The policy shall provide coverage for breach response costs as well as regulatory fines and penalties as well as credit monitoring expenses with limits sufficient to respond to these obligations. Limits no less than $2,000,000 per occurrence or claim, $4,000,000 in the aggregate. For consultants interacting with the public or with tenants, coverage must include coverage against discrimination, harassment, and fair housing claims under DFEH and HUD. If coverage is provided on a claims-made basis, the retroactive date must be shown and must be before the date of the contract or the beginning of the contract work; insurance must be maintained, and evidence of coverage must be provided for at least five (5) years after completion of the contract of work. If coverage is cancelled or non-renewed, and not replaced with another claims-made policy form with a retroactive date prior to the contract effective date, the Contractor must purchase “extended reporting” coverage for a minimum of five (5) years after completion of work.

1. The Policy shall include or be endorsed to include property damage liability coverage for damage to, alteration of, loss of, or destruction of the electronic data and/or information “property” of the AHA in the care, custody, or control of the Consultant. If not covered under the Consultant’s liability policy, such “property coverage of the AHA may be endorsed onto the Consultants Cyber Liability Policy as follows:

DocuSign Envelope ID: FC20CC1D-27CE-4697-B47D-B02636483E86

2. Cyber Liability coverage in an amount sufficient to cover the full replacement value of damage to, alteration of, loss of, destruction of electronic data and/or information “property” of the AHA that will be in the Care, custody, or control of Consultant.

If the consultant maintains broader coverage and/or higher limits than the minimums shown above, AHA requires and shall be entitled to the broader coverage and/or the higher limits maintained by the consultant. The insurance limits required by AHA are not represented as being sufficient to protect Consultant. Consultant is advised to consult Consultant's insurance broker to determine adequate coverage for Consultant.

(2) **Additional Insured Status**: The Housing Authority of the City of Alameda and its affiliates, Alameda Affordable Housing Corporation and Island City Development and its Subsidiaries, and their departments, their respective directors, officers, Boards of Commissioners, employees, designated volunteers, elected or appointed officials, (AHA), are to be covered as additional insured on the CGL policy with respect to liability arising out of work or operations performed by or on behalf of the Consultant including materials, parts, or equipment furnished in connection with such work or operations. General liability coverage can be provided in the form of an endorsement to the Consultant’s insurance (at least as broad as ISO Form CG 20 10 11 85 or if not available, through the addition of both CG 20 10, CG20 26, CG 20 33, or CG 20 38; and CG 20 37 if a later edition is used.

(3) **Primary Coverage**: For any claims related to this contract, the Consultant’s insurance coverage shall be primary coverage at least as broad as ISO CG 20 01 04 13 as respects AHA, its officers, officials, Board of Commissioners, employees, and volunteers. Any insurance or self-insurance maintained by AHA, its officers, officials, employees, or volunteers shall be excess of the Contractor’s insurance and shall not contribute to it.

(4) **Notice of Cancellation**: Each insurance policy required above shall provide that coverage shall not be canceled, except with 30 days’ notice to AHA.

DocuSign Envelope ID: FC20CC1D-27CE-4697-B47D-B02636483E86

(5) **Self-Insured Retentions**: Self-insured retentions must be declared and approved by AHA. AHA may require the Consultant to purchase coverage with a lower retention or provide proof of ability to pay losses and related investigations, claim administration, and defense expenses within the retention. The policy language shall provide, or be endorsed to provide, that the self-insured retention may be satisfied by either the named insured or AHA.

(6) **Acceptability of Insurers**: Insurance is to be placed with insurers with a current A.M. Best's rating of no less than A: VII, unless otherwise acceptable to AHA.

(7) **Verification of Coverage**: Consultant shall furnish AHA with original certificates and amendatory endorsements or copies of the applicable policy language effecting coverage required by this clause, and a copy of the Declarations and Endorsement page of the CGL policy listing all policy endorsements before work begins. However, failure to obtain the required documents prior to the work beginning shall not waive the Consultant's obligation to provide them. AHA reserves the right to require complete, certified copies of all required insurance policies, including endorsements required by these specifications, at any time

(8) **Subcontractors**: Consultant shall pass down the insurance obligations contained herein to all tiers of subcontractors working under the contract.

(9) **Notification of claims**: The Proposer agrees to notify AHA in writing of any claim by a third party or any incident or event that may give rise to a claim arising from the performance of the contract as soon as practicable, but no later than three (3) business days after their first knowledge of such claim or event.

(10) **Special Risks or Circumstance**: AHA reserves the right to modify these requirements, including limits, based on the nature of the risk, prior experience, insurer, coverage, or other special circumstance.

F. If applicable, a copy of the Proposer's license issued by the State of California licensing authority allowing the Proposer to provide the services detailed herein.

DocuSign Envelope ID: FC20CC1D-27CE-4697-B47D-B02636483E86

G. All Proposers shall be eligible to conduct business in the State of California and the City of Alameda and shall provide evidence of such eligibility if requested by AHA.

7.3. Right to Negotiate Final Fees. The AHA shall retain the right to negotiate the amount of fees that are paid to the successful Proposer, meaning the fees proposed by the top-rated Proposer may, at the AHA's discretion, be the basis for the beginning of negotiations. Such negotiations shall begin after the AHA has chosen a top-rated Proposer. If such negotiations are not, in the opinion of the RM successfully concluded within 5 business days, the AHA shall retain the right to end such negotiations and begin negotiations with the next-rated Proposer. The AHA shall also retain the right to negotiate with and make an award to more than one Proposer, as long as such negotiation(s) and/or award(s) are addressed in the above manner (i.e., top-rated first, then next-rated following until a successful negotiation is reached).

7.4 Contract Service Standards. All work performed pursuant to this RFP must conform and comply with all applicable local, state and federal codes, statutes, laws and regulations.

7.5. Attachments. Each of the attachments and exhibits attached hereto are incorporated herein by this reference.

Authorization to Distribute:

DocuSigned by:
Vanessa Cooper
5AFA57239EC2484... 11/17/2023

Vanessa Cooper, Executive Director Date

DocuSign Envelope ID: FC20CC1D-27CE-4697-B47D-B02636483E86

ATTACHMENT A

"Proposal Submittal Checklist"

(This Form must be fully completed and placed under Part No. 1 of the proposal)

Instructions: Unless otherwise specifically required, the items listed below must be completed and included in the proposal. Please complete this form by marking an "X," where provided, to verify that the referenced completed form or information has been included within the "hard copy" proposal submitted by the Proposer. Also, complete the Proposer's Statement as noted below:

X = ITEM INCLUDED	SUBMITTAL ITEMS
	Part 1 Proposal Submittal Checklist (Attachment A)
	Part 2 Form of Proposal (Attachment B)
	Part 3 Profile of Proposer Form (Attachment C)
	Part 4 Cover Letter
	Part 5 Qualifications and Experience
	Part 6 Proposed Approach
	Part 7 Customer Service
	Part 8 Cost Analysis and Budget for Primary Services
	Part 9 References
	Part 10 Other Company Information (Optional)
	Part 11 Confirmation of submission Conflict of Interest Form (Attachment I)

DocuSign Envelope ID: FC20CC1D-27CE-4697-B47D-B02636483E86

PROPOSER'S STATEMENT

The undersigned Proposer hereby states that by completing and submitting this form and all other documents within this proposal, they are verifying that all information provided herein is, to the best of their knowledge, true and accurate, and that if the AHA discovers that any information entered herein to be false, such shall entitle the AHA to not consider or make award or to cancel any award with the undersigned party.

Further, by completing and submitting the proposal, the undersigned Proposer is thereby agreeing to abide by all terms and conditions pertaining to this RFP as issued by the AHA, including an agreement to execute the AHA Sample Contract, attached to this RFP as Attachment D. In addition, Proposer hereby agrees to provide any additional documentation requested by the AHA upon notification of award under this RFP to ensure compliance with applicable requirements. Proposers may be asked to submit additional information to help facilitate the proposal review.

Pursuant to all RFP documents, this Form of Proposal, and all attachments, and pursuant to all completed documents submitted, including these forms and all attachments, the undersigned proposes to supply the AHA with the services described herein for the fee(s) entered herein.

Signature **Date** **Printed Name/Title**

Company

DocuSign Envelope ID: FC20CC1D-27CE-4697-B47D-B02636483E86

ATTACHMENT B

FORM OF PROPOSAL

(This Form must be fully completed and placed under Part 2 of the proposal submittal.)

A. **Form:** Each Proposer shall submit their proposed fees on this form only, which shall be completed, signed, and returned to the AHA with the completed Proposal.

B. **Entry of Proposed Fees:** Each Proposer must enter the proposed fees for each of the following Pricing Items where provided. Such fees shall be all-inclusive of all related costs that the Proposer will incur to provide the listed services, including, but not limited to (unless otherwise stated herein): sales tax, employee wages and benefits; clerical support; overhead; profit; licensing; insurance; materials; supplies; tools; equipment; long distance telephone calls; document copying; etc. "No Proposal" is not allowed for any item, although a “No Charge” is allowed for one or more of the Pricing Items.

C. **Pricing Items:** [Example pricing table below – include pricing information across every year in the proposed contract term, recurring fixed, variable, and hourly fees as applicable including space for additional services that may fall within the scope but not itemized]

QTY	U/M	Description	Fee FY2323
1	Each	Proposer-fixed Fee (including all expenses), AHA Demo & Replace (24) Exterior Balconies and all associated work, as shown on Gelfand Partners Architects plans permit set dated 8/25/2023.	$
	Hours	Proposer's Fee (for additional work that the AHA will require the successful Proposer to provide *that is not otherwise stated herein*)	$
		TOTAL OF ALL FEES/COSTS	$

DocuSign Envelope ID: FC20CC1D-27CE-4697-B47D-B02636483E86

_____

Date

_____

Company

_____

Print Name Signature

_____

Office Phone Mobile Phone Email

DocuSign Envelope ID: FC20CC1D-27CE-4697-B47D-B02636483E86

ATTACHMENT C

"PROFILE OF PROPOSER"

(This Form must be fully completed and placed under Part No.3 of the proposal submittal.)

(1) Prime ☐ Subcontractor ☐ *(this form must be completed by and for each)*

(2) Name of Proposer:_____ Telephone:_____Fax: _____
E-Mail: _____

(3) Street Address, City, State, Zip:_____

(4) **Please attach a brief biography/resume of the company**, including the following information:
Year Proposer Established; (b) Former Name and Year Established (if applicable); and (c) Name of Parent Company and Date Acquired (if applicable).

(5) Identify Principals/Partners in Proposer (submit under Part 5 a brief professional resume for each):

NAME	TITLE	% OF OWNERSHIP

(6) Identify the individual(s) that will act as project manager and any other supervisory personnel that will work on project; please submit under Part 5 a brief resume for each. (Do not duplicate any resumes required above):

NAME	TITLE

(7) Federal Tax ID No.: _____

(8) State of California Business Entity Number (Secretary of State): _____

(9) Worker's Compensation Insurance Carrier: _____

Policy No.:_____Expiration Date:_____

DocuSign Envelope ID: FC20CC1D-27CE-4697-B47D-B02636483E86

(10) General Liability Insurance Carrier: _____

Policy No.:_____Expiration Date:_____

(11) Professional Liability Insurance Carrier: _____

Policy No.:_____Expiration Date:_____

(12) Has your proposer or any member of your proposer been a part to litigation with a public entity?

☐ Yes ☐ No

If yes, please include in section a full detailed explanation including dates, with who and state the circumstances and any resolution.

(13) Is your proposer currently involved in local, County, State, Federal mortgage foreclosure proceedings or currently 90 days in arrears on a local public or private loan?

☐ Yes ☐ No

If yes, please include clarifying information including dates, with who and state the circumstances and any resolution in section (23) below.

(14) Is your proposer currently in foreclosure or substantial tax arrears with a City/County or local jurisdiction?

☐ Yes ☐ No

If yes, please include clarifying information including dates, with who and state the circumstances and any resolution in section (23) below.

(15) Has, or is this proposer or any member of your proposer, currently in default on any contract obligation or agreement of any kind entered into with a City/County or local public agency?

☐ Yes ☐ No

If yes, please include clarifying information including dates, with who and state the circumstances and any resolution in section (23) below.

(16) In the past 10 years, has your proposer or any member of your proposer failed to qualify as a responsible bidder, or refused to enter into a contract after an award has been made, privately or with any government agency?

☐ Yes ☐ No

If yes, please include clarifying information including dates, with who and state the circumstances and any resolution in section (23) below.

DocuSign Envelope ID: FC20CC1D-27CE-4697-B47D-B02636483E86

(17) In the last 7 years, has your proposer filed a bankruptcy petition or been the subject of involuntary bankruptcy proceedings?

☐ Yes ☐ No

If yes, please include clarifying information including dates, with who and state the circumstances and any resolution in section (23) below.

(18) In the last 10 years, failed to file any required tax returns, or failed to pay any applicable Federal, State of California, or City of Alameda or other fees?

☐ Yes ☐ No

If yes, please include clarifying information including dates, with who and state the circumstances and any resolution in section (23) below.

(19) Does your proposer or any member of your proposer have a record of substantial Building Code Violations or litigation against properties owned by the proposer or by any entity or individual that comprises the Proposer?

☐ Yes ☐ No

If yes, please include clarifying information including dates, with who and state the circumstances and any resolution in section (23) below.

(20) Has your proposer or any member of your proposer been convicted for fraud, bribery, or grand larceny?

☐ Yes ☐ No

If yes, please include clarifying information including dates, with who and state the circumstances and any resolution in section (23) below.

(21) Debarred Statement: Has this proposer, or any principal(s) ever been debarred from providing any services by the Federal Government, any state government, the State of California, or any local government agency within or without the State of California? Has this proposer been de-designated as a developer of any government sponsored or publicly assisted project?

☐ Yes ☐ No

If yes, please include clarifying information including dates, with who and state the circumstances and any resolution in section (23) below.

(22) Disclosure Statement: Does this proposer or any principals thereof have any current, past personal or professional relationship with any Commissioner or Officer of the AHA?

☐Yes ☐ No

If yes, please include clarifying information including dates, with who and state the circumstances and any resolution in section (23) below.

DocuSign Envelope ID: FC20CC1D-27CE-4697-B47D-B02636483E86

(23) Additional clarifying information regarding questions and statements (12) through (22) – include below and/or attach related documents:

_____

_____

_____

_____

_____

(24) Non-Collusive Affidavit: The undersigned party submitting this bid hereby certifies that such bid is genuine and not collusive and that said bidder entity has not colluded, conspired, connived or agreed, directly or indirectly, with any proposer or person, to put in a sham proposal or to refrain from proposing, and has not in any manner, directly or indirectly sought by agreement or collusion, or communication or conference, with any person, to fix the proposal price of affiant or of any other proposer, to fix overhead, profit or cost element of said proposal price, or that of any other bidder or to secure any advantage against the AHA or any person interested in the proposed contract; and that all statements in said bid are true.

(25) Verification Statement: The undersigned bidder hereby states that by completing and submitting this bid he/she is verifying that all information provided herein is, to the best of his/her knowledge, true and accurate, and agrees that if the AHA discovers that any information entered herein is false, that shall entitle the AHA to not consider nor make award or to cancel any award with the undersigned party.

Signature:

_____

Printed Name:

_____

Title:

_____

Company:

_____

Date:

_____

DocuSign Envelope ID: FC20CC1D-27CE-4697-B47D-B02636483E86

ATTACHMENT D

"Scope of Services"

Scope of services:

Demo, properly dispose, and replace (24) exterior private balconies at Anne B. Diament Plaza, 920 Park St., Alameda, Ca 94501, per Gelfand Partners Architectural plans dated 8/25/2023. (Attached).

DocuSign Envelope ID: FC20CC1D-27CE-4697-B47D-B02636483E86

920 PARK STREET BALCONY REPLACEMENT

PROJECT TEAM

OWNER:

HOUSING AUTHORITY OF THE CITY OF ALAMEDA
701 ATALNTIC AVENUE
ALAMEDA, CA 94501-2161
T: (510) 747-4340
CONTACT: JOSEPH NAGEL- CONSTRUCTION PM

ARCHITECT:

GELFAND PARTNERS ARCHITECTS
165 10TH STREET, SUITE 100
SAN FRANCISCO, CA 94103
T: (415) 346-4040 F: (415) 346-4103
CONTACT: AUSTEN DILIBERTO

STRUCTURAL ENGINEER:

TIPPING STRUCTURAL ENGINEERS
1906 SHATTUCK AVENUE
BERKELEY, CA 94704
T: (510) 549-1906
CONTACT: MARC STEYER

PROJECT INFORMATION

ADDRESS:

920 PARK STREET
ALAMEDA, CA 94501

PARCEL NO.:

70-181-37-2

CONSTRUCTED:

1974

OCCUPANCY:

R2

UNIT COUNT:

65

BUILDING TYPE:

VB

SCOPE OF WORK

1. REMOVE AND SALVAGE BALCONY GUARDRAILS INCLUDED IN BALCONY REPLACEMENT SCOPE
2. REMOVE BALCONIES IN REPLACEMENT SCOPE, PROVIDE NEW BALCONY STRUCTURE INCLUDING CONCRETE FOOTINGS, POSTS, AND JOISTS AS SHOWN IN THE DRAWINGS
3. PROVIDE NEW SHEATHING AND SURFACE COATING AT BALCONIES IN SCOPE
4. MODIFY AND REINSTALL EXISTING BALCONY GUARDRAILS TO COMPLY WITH CODE
5. REMOVE BUILDING SIDING AS INDICATED
6. PROVIDE NEW BUILDING SIDING WHERE REMOVED

PROJECT NOTES

1. COORDINATE LAYOUT DIMENSIONS INDICATED ON THE STRUCTURAL, ELECTRICAL DRAWINGS WITH THOSE INDICATED ON THE ARCHITECTURAL DRAWINGS. REPORT ALL DISCREPANCIES TO THE ARCHITECT BEFORE PROCEEDING WITH THE WORK.
2. IN THE EVENT THAT CERTAIN FEATURES OF THE NEW CONSTRUCTION ARE NOT FULLY SHOWN IN THE CONSTRUCTION DOCUMENTS, THEIR CONSTRUCTION SHALL BE OF THE SAME CHARACTER AS SIMILAR CONDITIONS THAT ARE SHOWN.
3. CHECK AND VERIFY ALL DIMENSIONS, ELEVATIONS AND EXISTING CONDITIONS ON THE PROJECT SITE BEFORE THE WORK BEGINS. NOTIFY THE ARCHITECT OF ANY DISCREPANCIES TO THE CONDITIONS SHOWN IN THE CONTRACT DOCUMENTS BEFORE CONSTRUCTION BEGINS.
4. EXISTING CONDITIONS SHOWN ON THE DRAWINGS WERE OBTAINED FROM THE OWNER-PROVIDED SURVEY DRAWINGS. THE ORIGINAL SURVEYS ARE PROVIDED AS A REFERENCE TO THESE BID DOCUMENTS. VERIFY ALL EXISTING CONDITIONS AND NOTIFY THE ARCHITECT OF ALL DEVIATIONS BEFORE PROCEEDING WITH THE WORK.
5. GELFAND PARTNERS ARCHITECTS HAS PREPARED THESE DOCUMENTS ONLY FOR THE IMPROVEMENTS SPECIFIED, DETAILED, INDICATED, OR SHOWN AS NEW WORK AND ASSUMES NO RESPONSIBILITY FOR OTHER CONSTRUCTION, MATERIAL, OR EQUIPMENT NOTED, INDICATED, OR SHOWN AS "EXISTING" OR AS "PROVIDED BY OTHERS." UNLESS OTHERWISE INDICATED OR NOTED, GELFAND PARTNERS ARCHITECTS HAS NEITHER CHECKED NOR VERIFIED THE STRUCTURAL INTEGRITY, QUALITY OF CONSTRUCTION, ACCESSIBILITY TO, EGRESS FROM, OR DESIGN OF THE EXISTING CONSTRUCTION AND ANY OTHER WORK NOT INCLUDED AS PART OF THE IMPROVEMENTS SPECIFIED, DETAILED, OR SHOWN ON THESE DOCUMENTS.
6. PROVIDE UL, GA, CBC, OR EQUAL LISTING NUMBERS FOR ALL FIRE-RATED CEILING / FLOOR, ROOF, WALL, AND STRUCTURAL FRAME ASSEMBLIES. THE COMPONENTS AND INSTALLATION DETAILS SUCH AS NAILING SCHEDULES SHALL BE AS SHOWN ON PLANS AND MUST CONFORM IN EVERY PARTICULAR WITH THE UL, GA, CBC, OR EQUAL LISTING NUMBERS SPECIFIED. CUSTOM DESIGNS WHICH COMBINE COMPONENTS FROM DIFFERENT APPROVED DESIGNS BUT HAVE NOT BEEN TESTED AS A COMPLETE ASSEMBLY WILL NOT BE ACCEPTABLE.
7. PENETRATIONS OF PIPES, CONDUITS, ETC., IN WALLS REQUIRING PROTECTED OPENINGS SHALL BE FIRE STOPPED. FIRE STOP MATERIAL SHALL BE A TESTED ASSEMBLY APPROVED BY THE STATE FIRE MARSHAL.
8. ADEQUATE ENGINEERING OBSERVATION AND TESTING SHALL BE PROVIDED DURING CONSTRUCTION BY INSPECTOR OF RECORD PER TITLE 24.
9. DO NOT SCALE DIMENSIONS FROM PLANS. USE WRITTEN DIMENSIONS. WHERE NO DIMENSION IS PROVIDED, CONSULT THE ARCHITECT FOR CLARIFICATION BEFORE PROCEEDING WITH THE WORK. THE CONTRACTOR IS RESPONSIBLE FOR ALL DIMENSIONS.
10. DRAWINGS AND SPECIFICATIONS REPRESENT FINISHED CONSTRUCTION. U.O.N. CONTRACTOR SHALL BE RESPONSIBLE FOR ALL MEANS AND METHODS OF CONSTRUCTION.
11. NO DEVIATION FROM THE APPROVED DRAWINGS AND SPECIFICATIONS IS PERMITTED WITHOUT THE PRIOR CONSENT OF THE ARCHITECT. THE ARCHITECT'S INTERPRETATION OF THESE DOCUMENTS SHALL BE FINAL.
12. LARGER SCALE DRAWINGS GOVERN IN CASE OF CONFLICT WITH SMALLER SCALE DRAWINGS.
13. OMISSIONS OR CONFLICTS BETWEEN VARIOUS ELEMENTS OF THE DRAWINGS, NOTES, SPECIFICATIONS, AND DETAILS SHALL BE BROUGHT TO THE ATTENTION OF THE ARCHITECT AND RESOLVED BEFORE PROCEEDING WITH THE WORK.
14. ALL ITEMS ARE NEW U.O.N.
15. WORK INDICATED AS "OWNER FURNISHED" (O.F.C.I.) SHALL MEET ALL APPLICABLE CODES AND REGULATORY REQUIREMENTS INDICATED WITHIN THESE DOCUMENTS AND SHALL BE INSTALLLED AND FULLY OPERATIONAL PRIOR TO THE FINAL APPROVAL AND OCCUPANCY OF THIS PROJECT

ABBREVIATIONS

&	AND	ID	INSIDE DIAMETER (DIM)
∠	ANGLE	IN	INCH
@	AT	INFO	INFORMATION
℄	CENTERLINE	INSUL	INSULATION
Ø	DIAMETER OR ROUND	LAV	LAVATORY
#	NUMBER	LB	POUND
d	PENNY	LF	LINEAR FEET
(E)	EXISTING	LIN	LINEAR
(N)	AIR /	LTG	LIGHTING
AC	CONDITIONING	MATL	MATERIAL
ACCS	ACCESS OR ACCESSIBLE	MAX	MAXIMUM
ACT	ACOUSTICAL CEILING TILE	MB	MACHINE BOLT
AD	AREA DRAIN	MECH	MECHANICAL
ADJ	ADJACENT	MFR	MANUFACTURER
AFF	ABOVE FINISH FLOOR	MIN	MINIMUM
AL	ALUMINUM	MISC	MISCELLANEOUS
ALT	ALTERNATE	MS	MACHINE SCREW
ANOD	ANODIZED	N	NORTH
APPROX	APPROXIMATE	NEG	NEGATIVE
ARCH	ARCHITECTURAL	NIC	NOT IN CONTRACT
ASTM	AMERICAN SOCIETY FOR TESTING & MATERIALS	NO	NUMBER
		NTS	NOT TO SCALE
AVG	AVERAGE	OC	ON CENTER(S)
BD	BOARD	OD	OUTSIDE DIAMETER
BLDG	BUILDING	OFCI	OWNER FURNISHED CONTRACTOR INSTALLED
BLK	BLOCK, BLOCKING		
BOT	BOTTOM	OFOI	OWNER FURNISHED & OWNER INSTALLED
BTW	BETWEEN	PERF	PERFORATED
BUR	BUILT-UP ROOF	PERP	PERPENDICULAR
CAB	CABINET	PL	PLATE
CB	CATCH BASIN	PLAM	PLASTIC LAMINATE
CT	CERAMIC TILE	PLBG	PLUMBING
CI	CAST IRON	PLY	PLYWOOD
CLG	CEILING	PREFAB	PREFABRICATE(D)
CLR	CLEAR	PROP	PROPERTY
CMU	CONCRETE MASONRY UNIT	PSI	POUNDS PER SQUARE INCH
COL	COLUMN	PTD	PAINTED
CONC	CONCRETE	PT	PRESSURE TREATED
CONT	CONTINUOUS	QTY	QUANTITY
DBL	DOUBLE	RCP	REFLECTED CEILING PLAN
DEMO	DEMOLISH	RD	ROOF DRAIN
DF	DRINKING FOUNTAIN	REF	REFERENCE
DIA	DIAMETER	REINF	REINFORCED
DIAG	DIAGONAL	REQD	REQUIRED
DIM	DIMENSION	RESIL	RESILIENT
DN	DOWN	RO	ROUGH OPENING
DR	DOOR	RWL	RAIN WATER LEADER
DWG	DRAWING	S	SOUTH
EA	EACH	SCD	SEE CIVIL DRAWINGS
ELEV	ELEVATION	SCHED	SCHEDULE; SCHEDULED
ELEC	ELECTRICAL	SED	SEE ELECTRICAL DWGS.
EXT	EXTERIOR	SF	SQUARE FOOT
FAB	FABRICATE	SHT	SHEET
FACP	FIRE ALARM CONTROL PANEL	SIM	SIMILAR
FAR	FLOOR AREA RATIO	SLD	SEE LANDSCAPE DWGS.
FD	FLOOR DRAIN	SMD	SEE MECHANICAL DWGS.
FDN	FOUNDATION	SPD	SEE PLUMBING DWGS.
FE	FIRE EXTINGUISHER	SPEC	SPECIFICATIONS
FFE	FINISHED FLOOR ELEVATION	SSD	SEE STRUCTURAL DWGS.
FIN	FINISH (ED)	SST	STAINLESS STEEL
FIXT	FIXTURE	STD	STANDARD
FLEX	FLEXIBLE	STL	STEEL
FLR	FLOOR	STRT	STRUCTURAL
FLUOR	FLUORESCENT	SUSP	SUSPEND; SUSPENDED
FOC	FACE OF CONCRETE	T&G	TONGUE AND GROOVE
FOF	FACE OF FINISH	THRU	THROUGH
FOS	FACE OF STUD	TOC	TOP OF CURB
FT	FEET, FOOT	TP	TOP OF PAVEMENT
FTG	FOOTING	TYP	TYPICAL
GA	GAUGE	TW	TOP OF WALL
GAL	GALLON	UON	UNLESS OTHERWISE NOTED
GALV	GALVANIZED	VERT	VERTICAL
GEN	GENERAL	VDFG	VERTICAL GRAIN DOUGLAS FIR
GFCI	GROUND FAULT CIRCUIT INTERRUPTED	W	WEST
GND	GROUND	W/	WITH
GSM	GALVANIZED SHEET METAL	W/O	WITHOUT
GYP BD	GYPSUM WALLBOARD	WD	WOOD
HB	HOSE BIB	WF	WIDE FLANGE (STEEL)
HM	HOLLOW METAL	WIN	WINDOW
HORZ	HORIZONTAL	YD	YARD
HT	HEIGHT		

SYMBOLS

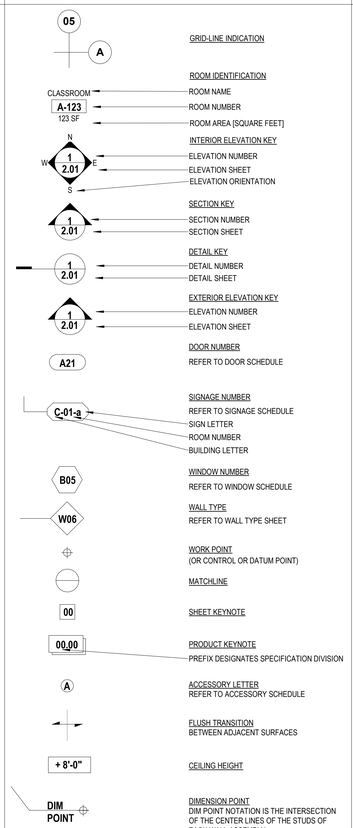

SHEET INDEX

General

A0.00	COVER SHEET

Architectural

A1.00	SITE PLAN
A1.10	1ST FLOOR DEMOLITION PLAN
A1.20	2ND FLOOR DEMOLITION PLAN
A1.30	3RD FLOOR DEMOLITION PLAN
A2.10	1ST FLOOR PLAN
A2.20	2ND FLOOR PLAN
A2.30	3RD FLOOR PLAN
A5.00	ENLARGED BALCONY PLANS
A9.00	BALCONY DETAILS

Structural

S0.00	ABBREVIATIONS, SHEET INDEX, & STRUCTURAL NOTES
S2.01	SECOND FLOOR PLAN
S2.02	THIRD FLOOR PLAN
S2.03	ENLARGED BALCONY PLANS
S6.01	STRUCTURAL DETAILS

Grand total: 15

APPLICABLE CODES

2022 Building Standards Administrative Code, Part 1, Title 24 C.C.R.
2022 California Building Code (CBC), Part 2, Title 24 C.C.R.
(2009 International Building Code and 2010 California Amendments)
2022 California Electrical Code (CEC), Part 3, Title 24 C.C.R.
(2008 National Electrical Code and 2010 California Amendments)
2022 California Mechanical Code (CMC) Part 4, Title 24 C.C.R.
(2009 Uniform Mechanical Code and 2010 California Amendments)
2022 California Plumbing Code (CPC), Part 5, Title 24 C.C.R.
(2009 Uniform Plumbing Code and 2010 California Amendments)
2022 California Energy Code (CEC), Part 6, Title 24 C.C.R.
2022 California Fire Code, Part 9, Title 24 C.C.R.
(2009 International Fire Code and 2010 California Amendments)
2022 California Green Building Standards Code (CALGreen), Part 11, Title 24 C.C.R.
2022 California Referenced Standards, Part 12, Title 24 C.C.R.
Title 19 C.C.R., Public Safety, State Fire Marshal Regulations.

REGIONAL MAP

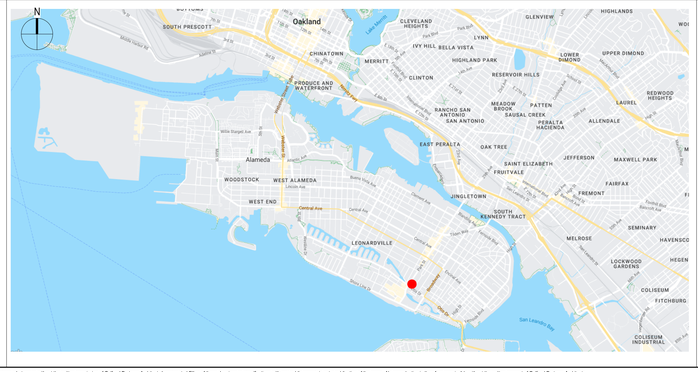

VICINITY MAP

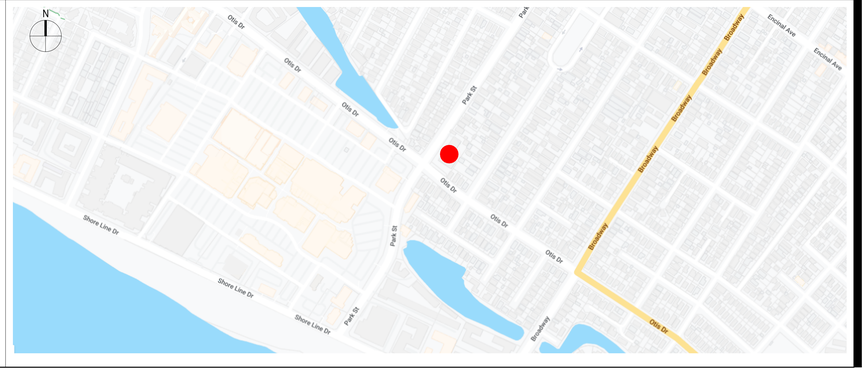

GELFAND PARTNERS ARCHITECTS

165 10th Street, Suite 100
San Francisco, CA 94103
415.346.4040 | www.gelfand-partners.com

Client

Housing Authority of the City of Alameda

Drawing Record

REV.	DESCRIPTION	DATE
1	PERMIT SET	08/25/23

Printed: 8/25/23 10:38:32

Architect

LICENSED ARCHITECT
AUSTEN BOYD DILIBERTO
NO. C-26276
REN. 6-30-25
STATE OF CALIFORNIA

Project
920 Park Street
Balconies

920 Park Street
Alameda, CA 94501

2313.00

Sheet
COVER SHEET

A0.00

8/25/23 10:38:32

All ideas, design arrangements and plans indicated or represented by this drawing are owned by, and are the property of Gelfand Partners Architects, Incorporated and were created, evolved, and developed for use on and in connection with this project. None of such ideas, arrangements, or plans shall be used by or disclosed to any person, firm, or corporation for any purpose whatsoever without the written permission of Gelfand Partners Architects Incorporated Filing of these drawings or specifications with any public agency is not a publication of the same. No reproduction is therefore permissible without the written consent of Gelfand Partners Architects.

C:\Users\Austeni\Documents\2313.00 920 Park Balconies_v21_GPA_austen.rvt

DocuSign Envelope ID: FC20CC1D-27CE-4697-B47D-B02636483E86

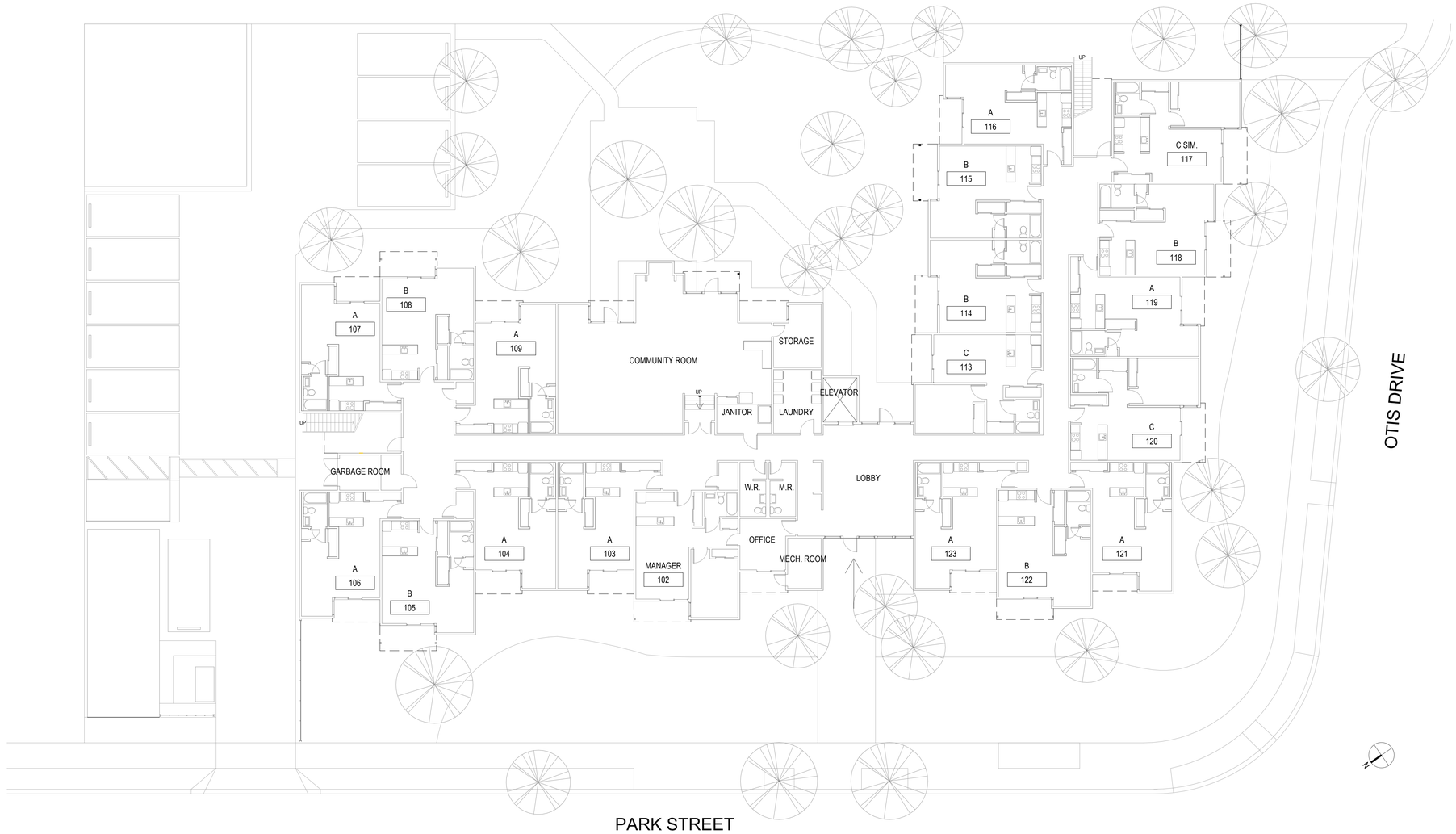

SITE PLAN 1
SCALE: 3/32" = 1'-0"

SHEET NOTES	KEYNOTES	LEGEND
		MAIN ENTRANCE

GELFAND PARTNERS ARCHITECTS
165 10th Street, Suite 100
San Francisco, CA 94103
415.346.4040 | www.gelfand-partners.com

Client
Housing Authority of the City of Alameda

Drawing Record

REV.	DESCRIPTION	DATE
1	PERMIT SET	08/25/23

Printed: 8/25/23 10:38:33

Architect
LICENSED ARCHITECT
AUSTEN BOYD DILIBERTO
NO. C-26278
REN. 6-30-25
STATE OF CALIFORNIA

Project
920 Park Street
Balconies

920 Park Street
Alameda, CA 94501

2313.00

Sheet
SITE PLAN

A1.00

8/25/23 10:38:33

All ideas, design arrangements and plans indicated or represented by this drawing are owned by, and are the property of Gelfand Partners Architects, Incorporated and were created, evolved, and developed for use on and in connection with this project. None of such ideas, arrangements, or plans shall be used by or disclosed to any person, firm, or corporation for any purpose whatsoever without the written permission of Gelfand Partners Architects Incorporated.Filing of these drawings or specifications with any public agency is not a publication of the same. No reproduction is therefore permissible without the written consent of Gelfand Partners Architects.

C:\Users\Austen\Documents\2313.00 920 Park Balconies_v21_GPA_austen.rvt

DocuSign Envelope ID: FC20CC1D-27CE-4697-B47D-B02636483E86

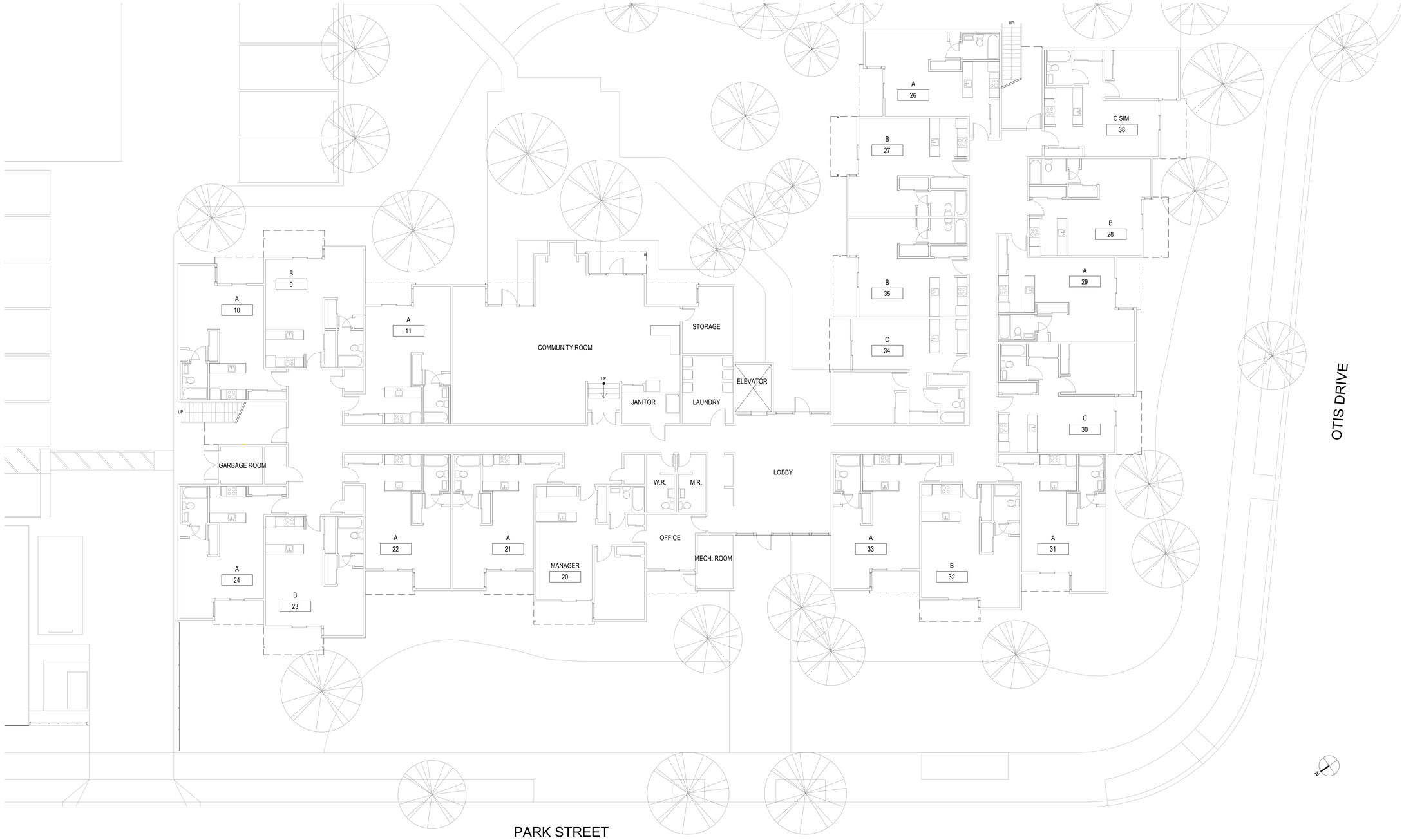

1ST FLOOR DEMO PLAN 1

SCALE: 1/8" = 1'-0"

SHEET NOTES

KEYNOTES

LEGEND

- (E) WALLS TO REMAIN
- (E) SLIDER DOOR TO REMAIN
- SALVAGE (E) RAILING
- REMOVE (E) CONCRETE BALCONY & WOOD FRAMING

GELFAND PARTNERS ARCHITECTS
165 10th Street, Suite 100
San Francisco, CA 94103
415.346.4040 | www.gelfand-partners.com

Client

Housing Authority of the City of Alameda

Drawing Record

REV.	DESCRIPTION	DATE
1	PERMIT SET	08/25/23

Printed: 8/25/23 10:38:36

Architect

LICENSED ARCHITECT
AUSTEN BOYD DILIBERTO
NO. C-26278
REN. 6-30-25
STATE OF CALIFORNIA

Project

920 Park Street Balconies

920 Park Street
Alameda, CA 94501

2313.00

Sheet

1ST FLOOR DEMOLITION PLAN

A1.10

8/25/23 10:38:36

All ideas, design arrangements and plans indicated or represented by this drawing are owned by, and are the property of Gelfand Partners Architects, Incorporated and were created, evolved, and developed for use on and in connection with this project. None of such ideas, arrangements, or plans shall be used by or disclosed to any person, firm, or corporation for any purpose whatsoever without the written permission of Gelfand Partners Architects Incorporated.Filing of these drawings or specifications with any public agency is not a publication of the same. No reproduction is therefore permissible without the written consent of Gelfand Partners Architects.

C:\Users\Austen\Documents\2313.00 920 Park Balconies_v21_GPA_austen.rvt

DocuSign Envelope ID: FC20CC1D-27CE-4697-B47D-B02636483E86

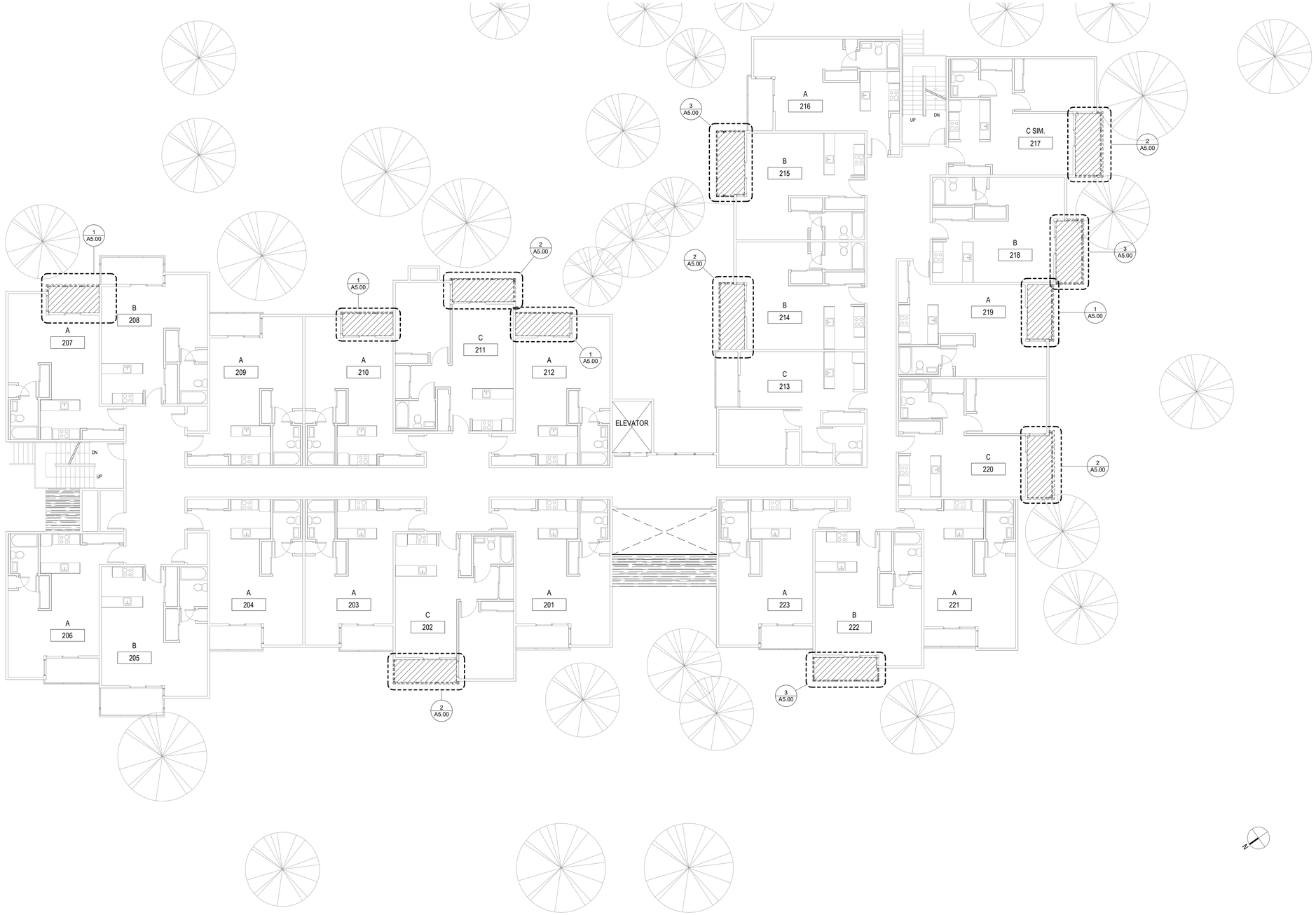

2ND FLOOR DEMO 1

SCALE: 1/8" = 1'-0"

SHEET NOTES

KEYNOTES

LEGEND

- (E) WALLS TO REMAIN
- (E) SLIDER DOOR TO REMAIN
- SALVAGE (E) RAILING
- REMOVE (E) CONCRETE BALCONY & WOOD FRAMING

GELFAND PARTNERS ARCHITECTS
165 10th Street, Suite 100
San Francisco, CA 94103
415.346.4040 | www.gelfand-partners.com

Client

Housing Authority of the City of Alameda

Drawing Record

REV.	DESCRIPTION	DATE
1	PERMIT SET	08/25/23

Printed: 8/25/23 10:38:39

Architect

LICENSED ARCHITECT
AUSTEN BOYD DILIBERTO
NO. C-26278
REN. 6-30-25
STATE OF CALIFORNIA

Project

920 Park Street Balconies

920 Park Street
Alameda, CA 94501

2313.00

Sheet

2ND FLOOR DEMOLITION PLAN

A1.20

8/25/23 10:38:39

All ideas, design arrangements and plans indicated or represented by this drawing are owned by, and are the property of Gelfand Partners Architects, Incorporated and were created, evolved, and developed for use on and in connection with this project. None of such ideas, arrangements, or plans shall be used by or disclosed to any person, firm, or corporation for any purpose whatsoever without the written permission of Gelfand Partners Architects Incorporated.Filing of these drawings or specifications with any public agency is not a publication of the same. No reproduction is therefore permissible without the written consent of Gelfand Partners Architects.

C:\Users\Austen\Documents\2313.00 920 Park Balconies_v21_GPA_austen.rvt

DocuSign Envelope ID: FC20CC1D-27CE-4697-B47D-B02636483E86

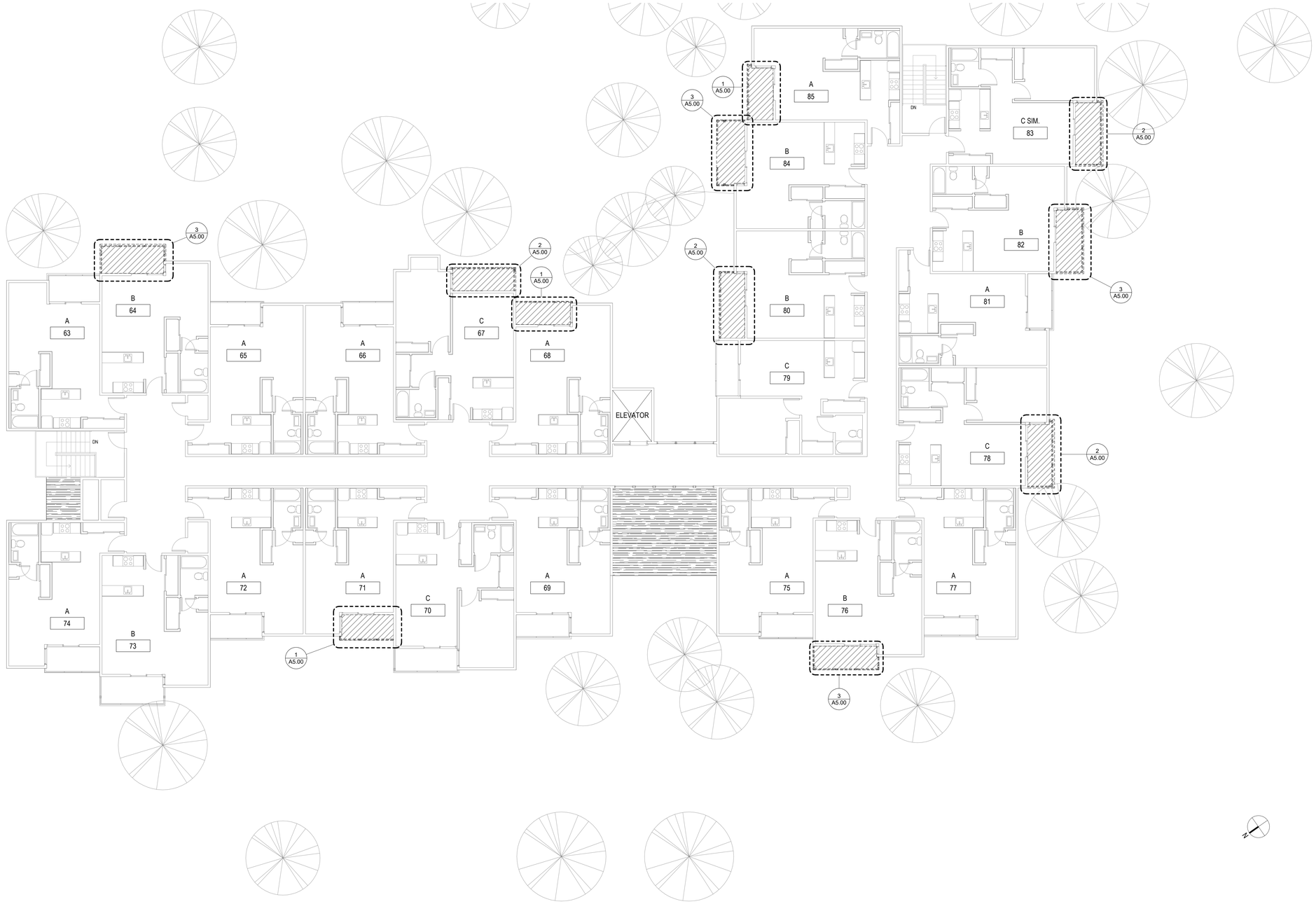

3RD FLOOR DEMO 1

SCALE: 1/8" = 1'-0"

SHEET NOTES

KEYNOTES

LEGEND

(E) WALLS TO REMAIN

(E) SLIDER DOOR TO REMAIN

SALVAGE (E) RAILING

REMOVE (E) CONCRETE BALCONY & WOOD FRAMING

GELFAND PARTNERS ARCHITECTS

165 10th Street, Suite 100
San Francisco, CA 94103
415.346.4040 | www.gelfand-partners.com

Client

Housing Authority of the City of Alameda

Drawing Record

REV.	DESCRIPTION	DATE
1	PERMIT SET	08/25/23

Printed: 8/25/23 10:38:41

Architect

LICENSED ARCHITECT
AUSTEN BOYD DILIBERTO
NO. C-26278
REN. 6-30-25
STATE OF CALIFORNIA

Project

920 Park Street Balconies

920 Park Street
Alameda, CA 94501

2313.00

Sheet

3RD FLOOR DEMOLITION PLAN

A1.30

8/25/23 10:38:41

All ideas, design arrangements and plans indicated or represented by this drawing are owned by, and are the property of Gelfand Partners Architects, Incorporated and were created, evolved, and developed for use on and in connection with this project. None of such ideas, arrangements, or plans shall be used by or disclosed to any person, firm, or corporation for any purpose whatsoever without the written permission of Gelfand Partners Architects Incorporated.Filing of these drawings or specifications with any public agency is not a publication of the same. No reproduction is therefore permissible without the written consent of Gelfand Partners Architects.

C:\Users\Austen\Documents\2313.00 920 Park Balconies_v21_GPA_austen.rvt

DocuSign Envelope ID: FC20CC1D-27CE-4697-B47D-B02636483E86

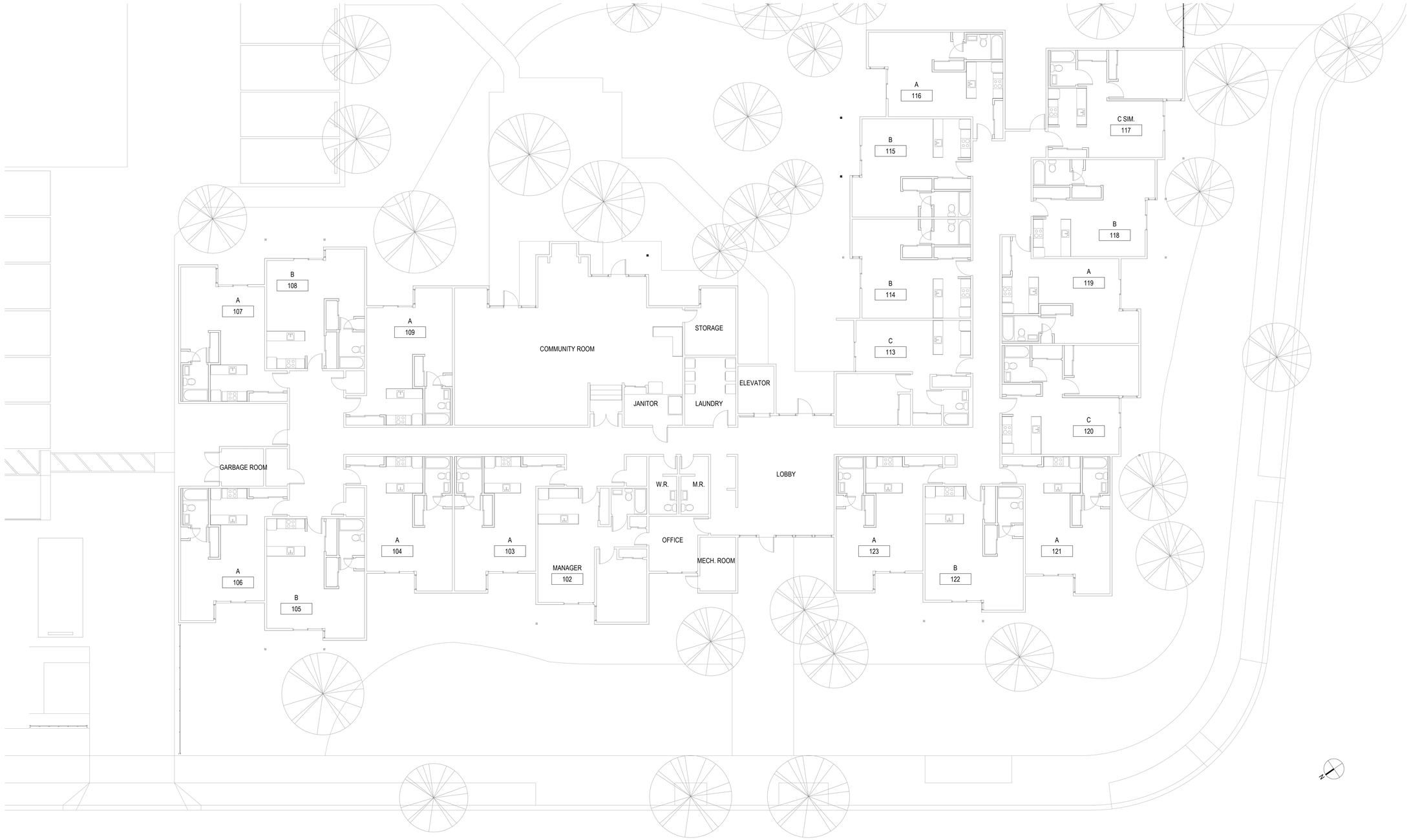

1ST FLOOR PLAN 1

SCALE: 1/8" = 1'-0"

SHEET NOTES

1. NO INTERIOR SCOPE
2. PROVIDE FRAMING AND TRAFFIC COATING AT BALCONIES IN SCOPE - SSD
3. REINSTALL (E) BALCONY GUARDRAILS, MODIFIED FOR COMPLIANCE

KEYNOTES

LEGEND

GELFAND PARTNERS ARCHITECTS
165 10th Street, Suite 100
San Francisco, CA 94103
415.346.4040 | www.gelfand-partners.com

Client

Housing Authority of the City of Alameda

Drawing Record

REV.	DESCRIPTION	DATE
1	PERMIT SET	08/25/23

Printed: 8/25/23 10:38:44

Architect

LICENSED ARCHITECT
AUSTEN BOYD DILIBERTO
NO. C-26278
REN. 6-30-25
STATE OF CALIFORNIA

Project

920 Park Street Balconies

920 Park Street
Alameda, CA 94501

2313.00

Sheet

1ST FLOOR PLAN

A2.10

8/25/23 10:38:44

All ideas, design arrangements and plans indicated or represented by this drawing are owned by, and are the property of Gelfand Partners Architects, Incorporated and were created, evolved, and developed for use on and in connection with this project. None of such ideas, arrangements, or plans shall be used by or disclosed to any person, firm, or corporation for any purpose whatsoever without the written permission of Gelfand Partners Architects Incorporated.Filing of these drawings or specifications with any public agency is not a publication of the same. No reproduction is therefore permissible without the written consent of Gelfand Partners Architects.

C:\Users\Austen\Documents\2313.00 920 Park Balconies_v21_GPA_austen.rvt

DocuSign Envelope ID: FC20CC1D-27CE-4697-B47D-B02636483E86

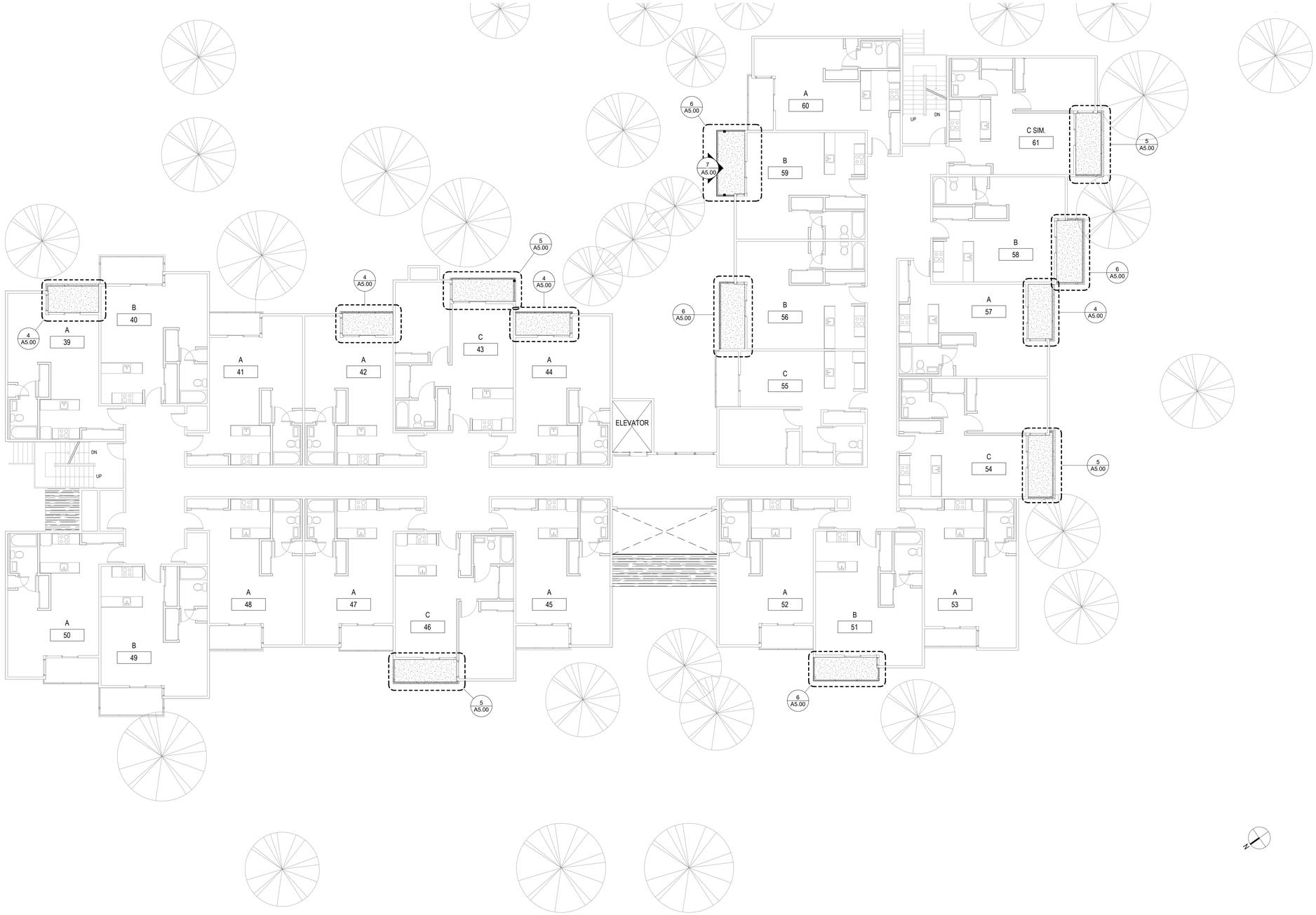

2ND FLOOR 1

SCALE: 1/8" = 1'-0"

SHEET NOTES

1. NO INTERIOR SCOPE
2. PROVIDE FRAMING AND TRAFFIC COATING AT BALCONIES IN SCOPE - SSD
3. REINSTALL (E) BALCONY GUARDRAILS, MODIFIED FOR COMPLIANCE

KEYNOTES

LEGEND

(E) WALL TO REMAIN

(E) SLIDER DOOR TO REMAIN

REINSTALL (E), MODIFIED RAILING

PROVIDE TRAFFIC COATING OVER FRAMING - SSD

GELFAND PARTNERS ARCHITECTS

165 10th Street, Suite 100
San Francisco, CA 94103
415.346.4040 | www.gelfand-partners.com

Client

Housing Authority of the City of Alameda

Drawing Record

REV.	DESCRIPTION	DATE
1	PERMIT SET	08/25/23

Printed: 8/25/23 10:38:46

Architect

LICENSED ARCHITECT
AUSTEN BOYD DILIBERTO
NO. C-26278
REN. 6-30-25
STATE OF CALIFORNIA

Project

920 Park Street Balconies

920 Park Street
Alameda, CA 94501

2313.00

Sheet

2ND FLOOR PLAN

A2.20

8/25/23 10:38:46

All ideas, design arrangements and plans indicated or represented by this drawing are owned by, and are the property of Gelfand Partners Architects, Incorporated and were created, evolved, and developed for use on and in connection with this project. None of such ideas, arrangements, or plans shall be used by or disclosed to any person, firm, or corporation for any purpose whatsoever without the written permission of Gelfand Partners Architects Incorporated.Filing of these drawings or specifications with any public agency is not a publication of the same. No reproduction is therefore permissible without the written consent of Gelfand Partners Architects.

C:\Users\Austen\Documents\2313.00 920 Park Balconies_v21_GPA_austen.rvt

DocuSign Envelope ID: FC20CC1D-27CE-4697-B47D-B02636483E86

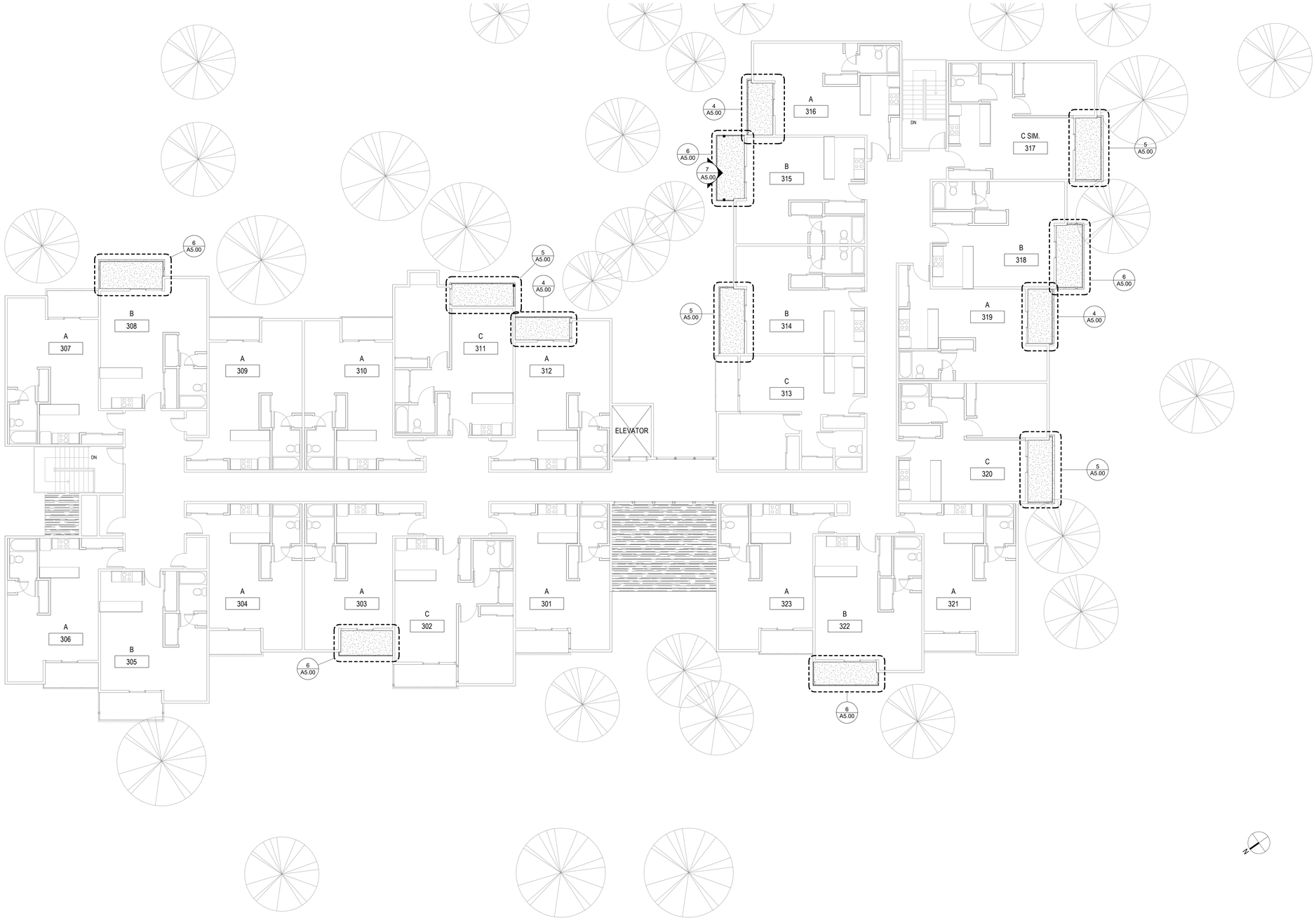

3RD FLOOR 1

SCALE: 1/8" = 1'-0"

SHEET NOTES

1. NO INTERIOR SCOPE
2. PROVIDE FRAMING AND TRAFFIC COATING AT BALCONIES IN SCOPE - SSD
3. REINSTALL (E) BALCONY GUARDRAILS, MODIFIED FOR COMPLIANCE

KEYNOTES

LEGEND

(E) WALL TO REMAIN

(E) SLIDER DOOR TO REMAIN

REINSTALL (E), MODIFIED RAILING

PROVIDE TRAFFIC COATING OVER FRAMING - SSD

GELFAND PARTNERS ARCHITECTS

165 10th Street, Suite 100
San Francisco, CA 94103
415.346.4040 | www.gelfand-partners.com

Client

Housing Authority of the City of Alameda

Drawing Record

REV.	DESCRIPTION	DATE
1	PERMIT SET	08/25/23

Printed: 8/25/23 10:38:49

Architect

LICENSED ARCHITECT
AUSTEN BOYD DILIBERTO
NO. C-26278
REN. 6-30-25
STATE OF CALIFORNIA

Project

920 Park Street Balconies

920 Park Street
Alameda, CA 94501

2313.00

Sheet

3RD FLOOR PLAN

A2.30

8/25/23 10:38:49

All ideas, design arrangements and plans indicated or represented by this drawing are owned by, and are the property of Gelfand Partners Architects, Incorporated and were created, evolved, and developed for use on and in connection with this project. None of such ideas, arrangements, or plans shall be used by or disclosed to any person, firm, or corporation for any purpose whatsoever without the written permission of Gelfand Partners Architects Incorporated.Filing of these drawings or specifications with any public agency is not a publication of the same. No reproduction is therefore permissible without the written consent of Gelfand Partners Architects.

C:\Users\Austen\Documents\2313.00 920 Park Balconies_v21_GPA_austen.rvt

DocuSign Envelope ID: FC20CC1D-27CE-4697-B47D-B02636483E86

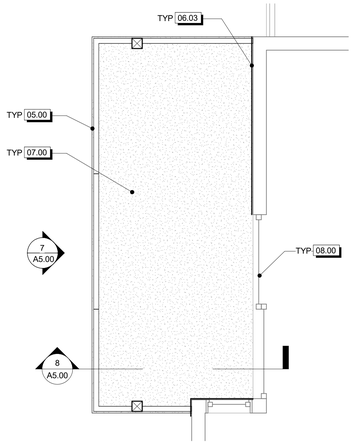

BALCONY TYPE 3 NEW CONSTRUCTION 6
SCALE: 1/2" = 1'-0"

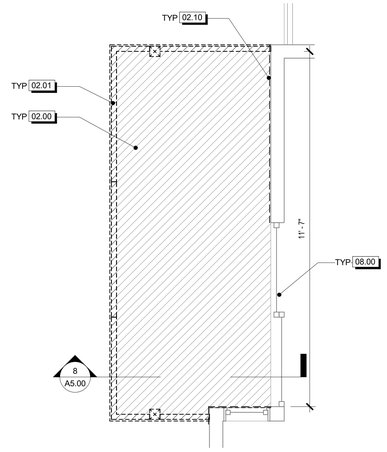

TYPE 3 - ENLARGED BALCONY DEMO PLAN 3
SCALE: 1/2" = 1'-0"

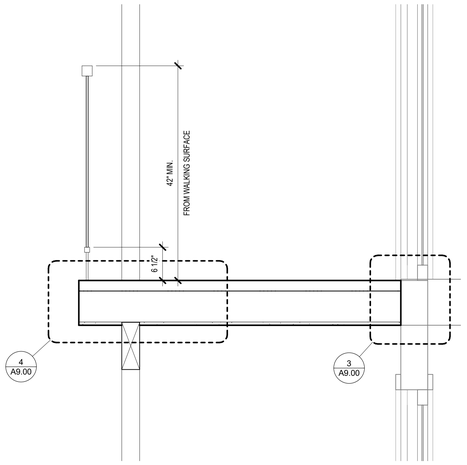

TYPICAL BALCONY ELEVATION 8
SCALE: 1" = 1'-0"

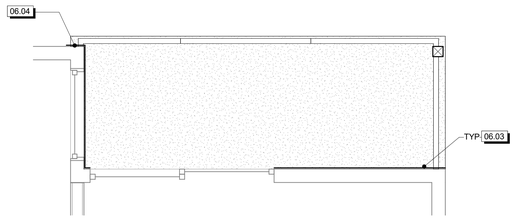

BALCONY TYPE 2 NEW CONSTRUCTION 5
SCALE: 1/2" = 1'-0"

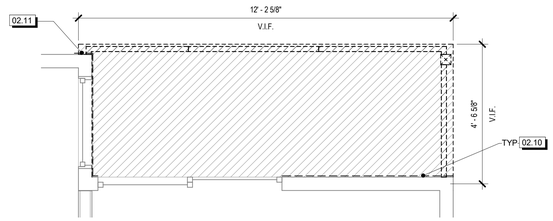

TYPE 2 - ENLARGED BALCONY DEMO PLAN 2
SCALE: 1/2" = 1'-0"

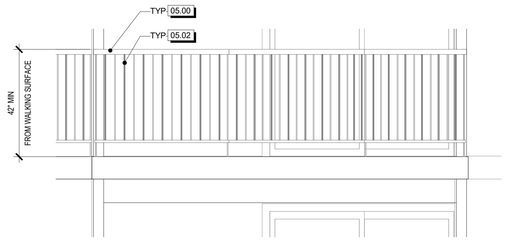

TYPICAL GUARDRAIL ELEVATION 7
SCALE: 1/2" = 1'-0"

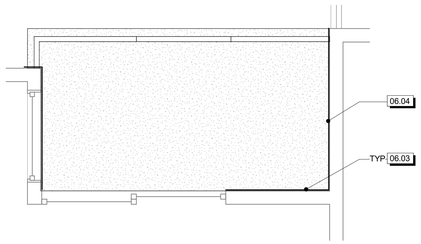

BALCONY TYPE 1 NEW CONSTRUCTION 4
SCALE: 1/2" = 1'-0"

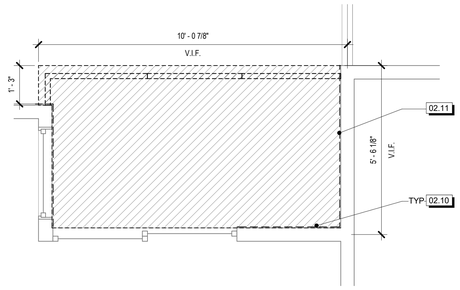

TYPE 1 - ENLARGED BALCONY DEMO PLAN 1
SCALE: 1/2" = 1'-0"

SHEET NOTES

1. BASIS OF DESIGN IS 'PLI-DEK SYSTEM - OVER PLYWOOD'
2. REMOVE SIDING AROUND BALCONIES TO ACHIEVE WATERPROOFING DETAILED ON A9.00, PROVIDE SIDING TO REPLACE (E)
3. GUARDRAILS SHALL BE MODIFIED AND REINSTALLED TO MEET CURRENT CODE - GAPS MUST BE LESS THAN 4"
4. FOLLOW MANUFACTURER REQUIREMENTS, REFER TO MANUFACTURER FOR ADDITIONAL DETAILS
5. CONTRACTOR SHALL PROVIDE TEMPORARY SUPPORT OF BALCONY OVERHANGS AND BALCONIES NOT IN SCOPE AS PART OF PERFORMANCE OF WORK

KEYNOTES

02.00	REMOVE (E) CONCRETE TOPPING AND (E) WOOD FRAMING
02.01	REMOVE (E) GUARDRAIL AND MODIFY FOR CODE COMPLIANCE
02.10	REMOVE PLYWOOD SIDING FROM FLOOR TO SOFFIT OF BALCONY
02.11	REMOVE WOOD SHINGLE SIDING AS REQUIRED AT BEAM CONNECTION & 6" ABOVE BALCONY SURFACE
05.00	REINSTALL MODIFIED METAL GUARDRAIL
05.02	WELD SQUARE METAL PICKETS TO MATCH (E), NOT TO EXCEED 4" GAP; CENTER BETWEEN (E) PICKETS, PAINT BLACK
06.03	PROVIDE PAINTED PLYWOOD SIDING TO MATCH (E) FROM FLOOR TO SOFFIT OF BALCONY, PROVIDE LAYER OF BUILDING PAPER IF NONE EXISTS OR IF IT IS DEGRADED, LAP W/ BALCONY FINISH PER DETAILS, REPLACE TRIM TO MATCH (E)
06.04	PROVIDE WOOD SHINGLE SIDING TO MATCH (E) AS REQUIRED AT BEAM CONNECTION & 6" ABOVE BALCONY SURFACE, PROVIDE LAYER OF BUILDING PAPER IF NONE EXISTS OR IF IT IS DEGRADED, LAP W/ BALCONY FINISH PER DETAILS
07.00	PROVIDE WATERPROOF TRAFFIC COATING OVER SHEATHING & FRAMING - SSD
08.00	(E) SLIDER DOOR TO REMAIN

LEGEND

GELFAND PARTNERS ARCHITECTS
165 10th Street, Suite 100
San Francisco, CA 94103
415.346.4040 | www.gelfand-partners.com

Client

Housing Authority of the City of Alameda

Drawing Record

REV.	DESCRIPTION	DATE
1	PERMIT SET	08/25/23

Printed: 8/25/23 10:38:52

Architect

LICENSED ARCHITECT
AUSTEN BOYD DILIBERTO
NO. C-26278
REN. 6-30-25
STATE OF CALIFORNIA

Project
920 Park Street Balconies

920 Park Street
Alameda, CA 94501

2313.00

Sheet
ENLARGED BALCONY PLANS

A5.00

8/25/23 10:38:52

All ideas, design arrangements and plans indicated or represented by this drawing are owned by, and are the property of Gelfand Partners Architects, Incorporated and were created, evolved, and developed for use on and in connection with this project. None of such ideas, arrangements, or plans shall be used by or disclosed to any person, firm, or corporation for any purpose whatsoever without the written permission of Gelfand Partners Architects Incorporated.Filing of these drawings or specifications with any public agency is not a publication of the same. No reproduction is therefore permissible without the written consent of Gelfand Partners Architects.

C:\Users\Austen\Documents\2313.00 920 Park Balconies_v21_GPA_austen.rvt

DocuSign Envelope ID: FC20CC1D-27CE-4697-B47D-B02636483E86

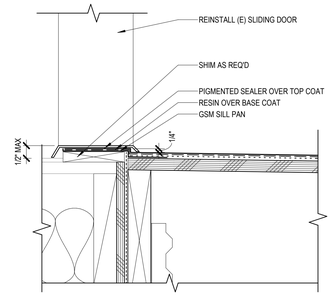

SLIDING DOOR SILL PAN 3

SCALE: 3" = 1'-0"

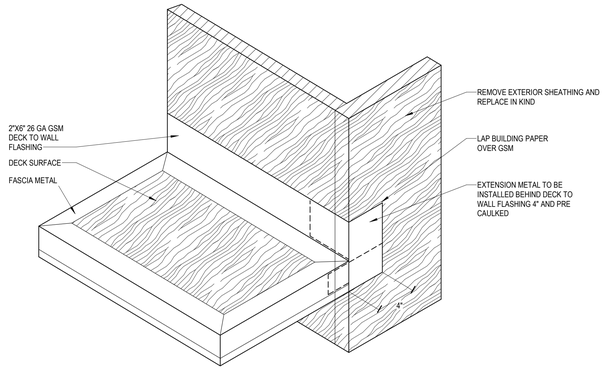

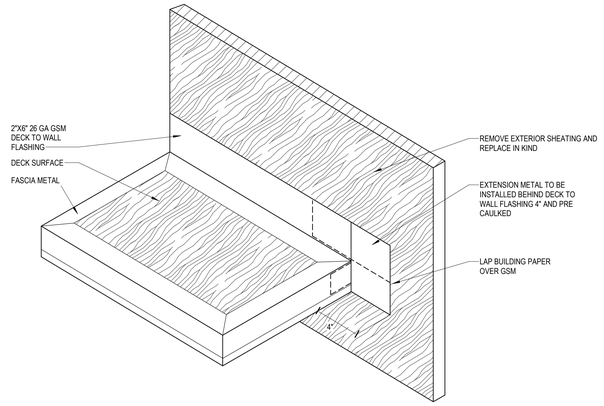

FASCIA TO WALL TO DECK FLASHING CORNER AND INTERSECTION 5

NTS

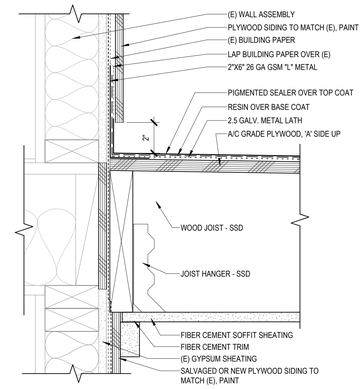

BALCONY CONNECTION AT BUILDING 2

SCALE: 3" = 1'-0"

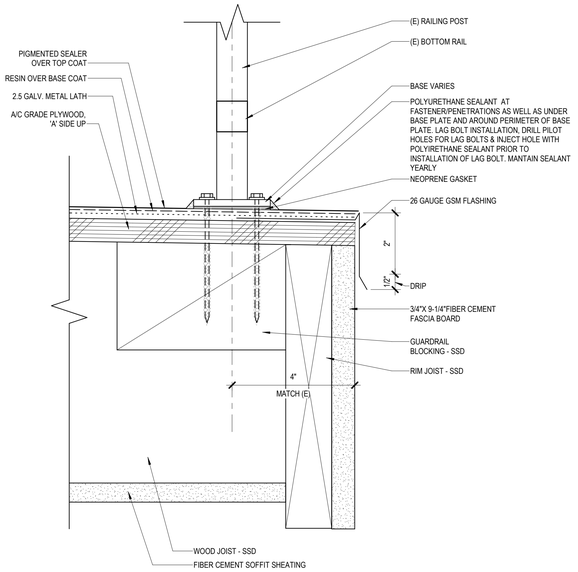

SURFACE MOUNT RAILING 6

SCALE: 6" = 1'-0"

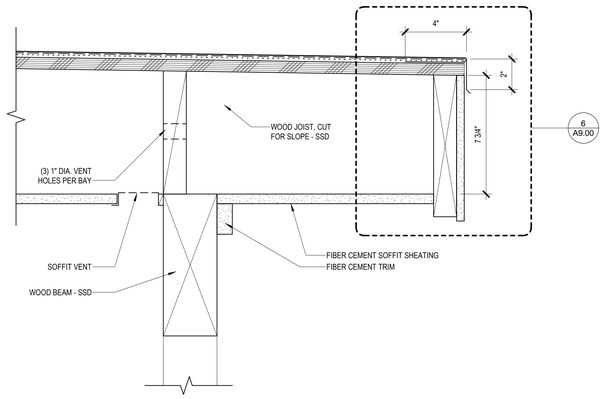

EDGE OF BALCONY 4

SCALE: 3" = 1'-0"

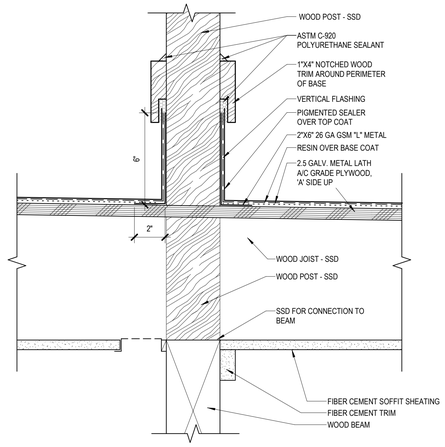

WOOD POST 1

SCALE: 3" = 1'-0"

GELFAND PARTNERS ARCHITECTS

165 10th Street, Suite 100
San Francisco, CA 94103
415.346.4040 | www.gelfand-partners.com

Client

Housing Authority
of The City of Alameda
701 Atlantic Avenue
Alameda, CA 94501-2161
T: (510) 747-4340

Drawing Record

REV.	DESCRIPTION	DATE
1	PERMIT SET	08/25/23

Printed: 8/25/23 10:38:53

Architect

LICENSED ARCHITECT
AUSTEN BOYD DILIBERTO
NO. C-26278
REN. 6-30-25
STATE OF CALIFORNIA

Project

920 Park Street
Balconies

920 Park Street
Alameda, CA 94501

2313.00

Sheet

BALCONY DETAILS

A9.00

8/25/23 10:38:53

All ideas, design arrangements and plans indicated or represented by this drawing are owned by, and are the property of Gelfand Partners Architects, Incorporated and were created, evolved, and developed for use on and in connection with this project. None of such ideas, arrangements, or plans shall be used by or disclosed to any person, firm, or corporation for any purpose whatsoever without the written permission of Gelfand Partners Architects Incorporated.Filing of these drawings or specifications with any public agency is not a publication of the same. No reproduction is therefore permissible without the written consent of Gelfand Partners Architects.

C:\Users\Austen\Documents\2313.00 920 Park Balconies_v21_GPA_austen.rvt

DocuSign Envelope ID: FC20CC1D-27CE-4697-847D-B02636483E86

STRUCTURAL ABBREVIATIONS

B.O.	BOTTOM OF	REQ'D	REQUIRED
BOT.	BOTTOM	S.A.D.	SEE ARCHITECTURAL DWGS
CONC.	CONCRETE	S.M.S.	SHEET METAL SCREW
CONN.	CONNECTION	STD	STANDARD
CONT.	CONTINUOUS	T.O.C.	TOP OF CONCRETE
CTSK.	COUNTERSINK(SUNK)	T.O.S.	TOP OF STEEL
DWGS.	DRAWINGS	TYP.	TYPICAL
(E)	EXISTING	U.O.N.	UNLESS OTHERWISE NOTED
EA.	EACH	V.I.F.	VERIFY IN FIELD
E.O.R.	ENGINEER OF RECORD	W/	WITH
E.S.	EACH SIDE	WPFG	WATERPROOFING
E.W.	EACH WAY	XS	EXTRA STRONG (PIPE)
F.F.E.	FINISH FLOOR ELEVATION	XXS	DOUBLE EXTRA STRONG (PIPE)
H.D.G.	HOT-DIP GALVANIZED	&	AND
H.S.	HEADED STUDS	@	AT
HSS	HOLLOW STRUCTURAL SECTION	CL	CENTER LINE
GA.	GAUGE	Ø	DIAMETER OR ROUND
L	ANGLE (STEEL SHAPE)	PL	PLATE, PROPERTY LINE
LW	LIGHT WEIGHT	#	POUND OR NUMBER
MAX.	MAXIMUM (AT MOST)	±	TOLERANCE
MIN.	MINIMUM (AT LEAST)		
(N)	NEW		
O.C.	ON CENTER		
P.D.F.	POWDER DRIVEN FASTENER(S)		

OTHER ABBREVIATIONS (PRODUCT ABBREVIATIONS):

FOR POWDER-DRIVEN FASTENERS AND CONCRETE ANCHOR ABBREVIATIONS, SEE HILTI NORTH AMERICAN PRODUCT TECHNICAL GUIDE (available at www.us.hilti.com) AND SIMPSON STRONG-TIE ANCHOR SYSTEMS CATALOG (available at www.strongtie.com).

STRUCTURAL NOTES

DIVISION 01: GENERAL CONDITIONS

SECTION A: GENERAL REQUIREMENTS

1. These notes apply to all drawings and govern unless otherwise noted. All work shall conform to the 2022 California Building Code, as modified by state and local jurisdiction.

2. These structural drawings are copyrighted instruments of service of Tipping Structural Engineers (TSE), for sole use for this project. TSE CAD files may only be used as backgrounds for shop drawings after TSE receives a signed waiver from each party using the files, addressing the limitations and proper use of these CAD files.

3. Verify all existing conditions and proposed dimensions at the job site. Compare structural drawings with architectural, mechanical, and electrical and plumbing drawings before commencing work. Notify Architect of any discrepancies and do not proceed with affected work until they are resolved. Do not scale drawings.

4. Unless otherwise shown or noted, all typical details shall be used where applicable. All details shall be considered typical at similar conditions.

5. Unless otherwise shown or noted, install, test, and inspect manufactured structural products in accordance with manufacturer's recommendations and applicable evaluation service reports.

6. The Contractor and Special Inspector shall contact the Structural Engineer regarding any questions of interpretation of these specifications and drawings.

7. Submittal Protocol:

   1. Shop drawings, design-build calculations, and product data shall be submitted to, and reviewed by, General Contractor, Architect, and Engineer before fabrication. All submittals shall have a clear 3.5-inch by 7-inch space reserved for shop drawing stamps by General Contractor, Architect and Engineer. If submitted sheets do not have sufficient room, a cover sheet with a table of contents and sufficient space for stamps may be submitted.

   2. Each shop drawing submittal to the Engineer shall be submitted electronically:

   3. Submit shop drawings well in advance of fabrication; allow at least three weeks for engineering review, and additional time for review and forwarding by Architect and General Contractor, and for revisions and re-submittal, if required.

   4. Shop drawings and welding procedure submittals shall be dated, and each update shall be identified with a unique revision number. All items on the shop drawings that vary from the Structural Drawings, alter structural details, or extrapolate from similar details, shall be circled by a cloud with the note "Engineer Verify."

   5. Submittal review is of a general nature only, and responsibility for conformance with drawing intent shall remain with the Contractor. Review does not imply or state that Contractor has correctly interpreted the Contract Documents.

   6. Satisfactory review of shop drawings and product data must be obtained prior to fabrication or delivery of material to the site. The following items shall be submitted:
      1. Product literature for Structural Epoxies and Grouts.
      2. Structural drawings and calculations for all shoring of existing and new structures, where needed to adequately support imposed vertical and lateral loads. These submittals are for information-only.

   7. Safety Measures:
      1. At all times, Contractor shall be solely and completely responsible for job site conditions including safety of people and property, and for all necessary independent engineering reviews of these conditions.
      2. Install shoring and bracing of soil, and of existing and new structures, where necessary to adequately support imposed vertical and lateral loads. Maintain shoring and bracing until the new structure can support the anticipated loads.
      3. Engineer's job site visits are not intended to include review of adequacy of Contractor's safety measures.

   8. Any openings, holes, cuts or discontinuities not shown on the structural drawings and extending into or through structural elements require Engineer's prior approval and may require special structural detailing. Existing concrete slab reinforcing outside of areas specifically called for demolition may not be cut without Engineer's prior approval.

SECTION B: STRUCTURAL TESTING, INSPECTION, AND OBSERVATION

1. Provide tests and inspections for all items as required by the California Building Code and all applicable local ordinances.

2. The Owner shall retain an independent testing agency to perform all required testing and inspections.

3. The Contractor is responsible for coordinating with Owner's Testing Agency and Special Inspector to schedule all required tests and inspections.

4. The following specific items shall be inspected and/or tested by the testing lab:

   1. Bolts and embedded items installed into concrete.

   2. Wood framing, including floor and roof nailing, lumber grade, size and connections.

   3. Demolition work of structural elements including exterior walls, bearing walls, beams, girders, columns, and floor diaphragms.

5. Structural Observation: In addition to inspection by Special Inspector, Structural Engineer will review construction for general conformance with Structural Drawings. Contractor shall notify Structural Engineer at least five working days prior to concealing any structural items. Structural Engineer will then determine if a site visit is appropriate. Notification shall include the following items:

   1. Structural framing and panel shear walls, prior to concealment by fireproofing or finish surfaces.

SECTION C: STRUCTURAL DESIGN BASIS

1. Construct in conformance with the 2022 California Building Code and all applicable local ordinances.

2. Design vertical loads:

	DL (psf)	LL (psf)
Sloped Roof:	15	16
Balconies:	10	60

3. Design lateral loads are based on the following criteria:

   1. Occupancy Category: II

   2. Seismic
      1. Importance Factor, I: 1.00
      2. S_{-S}: 1.626 g (0.2 sec site specific response)
      3. S_{-1}: 0.614 g (1.0 sec site specific response)
      4. Site Soil Class: D
      5. S_{-ds}: 1.301 g (0.2 sec site specific response)
      6. S_{-d1}: 0.867 g (1.0 sec site specific response)
      7. SDC: D (Seismic Design Category)
      8. T_{-a}: sec (Approximate Fundamental Period)
      9. C_{-s}: g (Seismic Response Coefficient)
      10. R: (Response Modification Factor)

   3. The seismic load resisting system (SLRS) of the structure comprises the following elements described in the drawings:
      1. Wood framed shear walls

SECTION 03 25 00: CONCRETE AND MASONRY ANCHORS

1. EPOXY ADHESIVE DOWELS

   1. Epoxy for epoxy-adhesive dowels (reinforcing bars or all-thread rods) shall be:
      1. Hilti HIT-RE 100, in accordance with ICC ESR-3829,
      2. Simpson SET-XP, in accordance with ICC ESR-2508,
      3. Approved equal or better substitution.

   2. Epoxy shall be in two-part cartridges dispensed through proprietary mixing nozzles. Polyester or acrylic resins shall not be substituted for epoxy.
      1. Install dowels in existing concrete as follows:
         1. Locate rebar or PT tendons with non-destructive means prior to drilling. Do not damage any reinforcement.
         2. Drill hole to depth shown on drawings. If not shown on the drawings, hole depth shall be at least 12 diameters. Hole size shall be 1/8 inch greater than nominal bar diameter (see manufacturer).
         3. Clean hole with wire bottle-type brush and blow out with oil-free compressed air. Dowels shall be clean, dry and free of oil, grease and dirt. Inspect holes and dowels before filling holes with epoxy.
         4. After inspection, place measured amount of epoxy in hole with applicator equipped with an extension nozzle.
         5. Insert dowel slowly while rotating about 90 degrees. Secure it in the center of the hole.
         6. Remove excess epoxy from around hole before it hardens.
         7. Do not disturb, bolt up, or apply load to embedded anchor until the epoxy is fully cured (see manufacturer for cure time).

   3. Testing of epoxy dowels in concrete:
      1. Owner's Testing Agency to verify diameter, depth and cleanliness of drilled holes.
      2. Owner's Testing Agency to test 25% of the first 100 dowels installed in direct tension to the following values:

#3 bar	5,000	3/8" thrd. Rod	3,500 #
#4 bar	9,000	1/2" thrd. Rod	6,000 #
#5 bar	14,000	5/8" thrd. Rod	9,000 #
#6 bar	20,000	3/4" thrd. Rod	12,000 #
#7 bar	27,000	7/8" thrd. Rod	18,000 #
#8 bar	36,000	1" thrd. Rod	22,000 #

      3. If testing of the first 100 dowels results in a "pass" rate of 95% or better, sampling may be reduced to 10% of the remaining work.

2. MECHANICAL ANCHORS

   1. Use the concrete mechanical anchor specified on the drawings. The following products may be proposed as substitutions, but require specific approval on a case-by-case basis. In substitution request, specify location and structural detail. Do not install substitute anchor unless substitution request is approved.
      1. Expansion Anchor:
         1. Hilti Kwik Bolt TZ2 complying with ICC ESR-4266,
         2. Dewalt/Powers Power-Stud+SD2 complying with ICC ESR-2502, or
         3. Simpson Strong-Bolt 2 complying with ICC ESR-3037.
      2. Screw-in Anchor:
         1. Dewalt/Powers Screwbolt+ complying with ICC ESR-3889 or
         2. Simpson Titen HD Anchor complying with ICC ESR-2713.
      3. Concrete/Masonry Screws:
         1. Products:
            1. Hilti Kwik-Con II+, or
            2. Simpson Titen Concrete and Masonry Screw.
         2. Called out as "CONCRETE SCREW" on the drawings,
         3. 1/4" diameter screw with 1-3/4" minimum embedment into concrete, unless otherwise noted on the drawings,
         4. Phillips flat tapered head if fastened to wood, pan hex head if fastened to steel.
         5. Stainless Steel if exposed to the weather or fastened to preservative-treated wood.

   2. Drill holes to manufacturer's specified diameter with carbide-tipped bits meeting the diameter requirements of ANSI B212.15. Rotary-hammer drills with light, high-frequency impact are recommended for drilling holes in reinforced concrete or solid-grouted CMU.

   3. Follow manufacturer's installation instructions. Torque bolts as recommended by manufacturer. Expansion anchors shall be re-tightened after 24 hours or more, to compensate for initial relaxation. Mechanical anchors shall be covered by spray-on fireproofing or otherwise protected from fire as required by the Architect.

   4. Owner's Testing Agency to make periodic inspections during anchor installation to verify anchor type and dimensions, concrete thickness and type (normal weight vs. lightweight), anchor embedment, and adherence to manufacturer's installation instructions.

DIVISION 05: METALS

SECTION 05 12 00: STRUCTURAL STEEL AND MISCELLANEOUS IRON

1. Steel pipe shall conform to ASTM A53, Type E or S, Grade B (Fy = 35 ksi), unless otherwise noted. Finish black, except where required to receive hot-dip galvanized coating.

2. Round HSS shall conform to ASTM A500 Grade B (Fy = 42 ksi); ASTM A847 (Fy = 50 ksi) may be substituted.

3. Square or rectangular HSS shall conform to ASTM A500 Grade B (Fy = 46 ksi); ASTM A847 (Fy = 50 ksi) may be substituted.

4. Structural steel plates and bars:

   1. ASTM A36 (Fy = 36 ksi); ASTM A572 Grade 50 may be substituted.

   2. Additional requirement for thickness exceeding 2 inches: minimum CVN toughness of 20 ft-lb at +70 degrees Fahrenheit, tested in accordance with ASTM A673 Frequency H.

5. Paint steel with one coat of approved shop primer, except that surfaces that are to receive welds, headed shear studs, fully pretensioned bolts, slotted bolted brass-shimmed connections, concrete encasement, or spray-on fireproofing shall be free of paint.

6. Any steel exposed to weather shall be hot-dip galvanized per ASTM A123 (steel fasteners per ASTM A153 or B695, Class 55), or weatherproofed by an approved equal.

7. All work shall be performed in accordance with:

   1. AISC 360, "Specification for Structural Steel Buildings" and

   2. AISC 303, "Code of Standard Practice for Steel Buildings and Bridges," modified as follows:
      1. No provision of AISC 303 shall be effective to change the duties and responsibilities of the Owner, Contractor, Architect and Structural Engineer from those set forth in these Contract Documents.
      2. Reference to AISC 303 is made only to technical issues and excludes all issues related to schedule, Owner's responsibilities, approvals and commercial terms.
      3. Where discrepancies exist between the requirements of the Contract Documents and AISC 303, the requirements of the Contract Documents shall govern and the corresponding provision of AISC 303 shall be assumed as being deleted.
      4. Contrary to AISC 303 Section 4.1, issuance of structural design drawings for bid does not constitute a release for construction. Prior to proceeding with mill orders, shop drawings or fabrication, Contractor shall confirm with Owner, Architect and Structural Engineer which portions of the work have been released for construction.

8. Welding shall conform with the latest edition of the AWS D1.1 specifications and shall be done by certified welders. All electrodes shall be E70XX (70 ksi) unless otherwise noted on the drawings. Electrodes and fluxes shall be kept clean and dry per AWS D1.1 and the following additional requirements. FCAW (wire) electrodes shall be consumed within two weeks of opening their original packaging. Rusted electrodes shall be discarded. SMAW (stick) electrodes shall be low hydrogen type, shall have moisture-resistant coatings, and shall be used within 8 hours of opening their hermetically-sealed containers, or shall be redried per AWS D1.1, Section 4.5.2. SAW flux shall be kept clean and dry per AWS D1.1, Section 4.8.3. SAW flux open to air for more than two days shall be re-dried for at least two hours at between 500 and 900 degrees Fahrenheit. Wet flux shall be discarded.

9. All welding shall be performed in strict adherence to a written welding procedure specification (WPS) per AWS D1.1, Section 6.5.2. For each type of weld, a WPS shall be submitted to the testing laboratory for approval on AWS Form E-1 (see Appendix E of AWS D1.1). Supporting Procedure Qualification Records (PQR) shall be submitted for welds not pre-qualified by AWS D1.1. The WPS shall list both the AWS and Manufacturer's electrode designation. The Manufacturer's Electrode Data Sheets shall be submitted along with the WPS, and all welding parameters shall be within the electrode Manufacturer's Recommendations. Copies of the WPS shall be on site and available to all Welders and the Special Inspector.

DIVISION 06: WOOD

SECTION 06 10 00: ROUGH CARPENTRY

1. Unless otherwise shown on the drawings, nailing shall conform to the CBC, Table 2304.10.1. Unless otherwise noted on these drawings, all nails shall be common nails (as opposed to box, sinker or cooler nails). 16 penny vinyl coated sinkers may be substituted for 16 penny box or common nails for rough framing. Sinkers shall not be used with metal connectors.

2. Lag Screws: Pre-drill lead holes with 1/2 to 2/3 of shank diameter for threaded portion of lag screw, and full diameter for the unthreaded shank portion. Lag screws shall be torqued, and never hammered, into position. Lubricate threads with soap or other wood-compatible lubricant.

3. Place joists with crown up. Add one additional joist under all parallel partitions.

4. Block all joists at supports and under all partitions with minimum 2x solid blocking. Block and bridge roof joists at 10 feet and floor joists at 8 feet where ceiling assembly is not attached directly to bottom of joists.

5. Wood connector call-outs on the Drawings refer to Simpson Strong-Tie Connectors unless otherwise noted. USP Lumber Connectors or other manufacturers' products may only be used if proposed connector:

   1. Has a Simpson-equivalent reference number or label,

   2. Has equal or greater allowable load values, substantiated by a current ESR,

   3. Fits within the geometric constraints of the installed condition,

   4. Has equal or greater corrosion resistance and

   5. Is submitted and approved as an equal or better substitution.

   6. Note: Some Simpson Strong-Tie products have no known substitutions, such as connectors with self-drilling screws.

6. Unless otherwise shown on the Drawings:

   1. Fill all fastener holes with the maximum number, diameter and length of fasteners (nails, bolts, etc.).

   2. For straps where manufacturer offers nailed or bolted alternatives, install nails.

7. All wood and wood products in contact with concrete or masonry shall be pressure-treated (see "sills" note for AWPA UC grade). Species and grade for pressure-treated products shall match that specified for untreated similar lumber or wood products (i.e., pressure-treated Hem-Fir may not be substituted for pressure-treated Douglas-Fir), unless otherwise noted on the drawings.

8. Use hot-dipped galvanized or stainless steel nails, bolts, and hardware where exposed to weather or soil. Nails and screws fastened to pressure-preservative-treated wood (including all mudsills) or fire-retardant-treated wood shall also be hot-dip galvanized or stainless steel, except that nails and screws fastened to ACQ-preserved wood shall only be stainless steel. Hot-dipped galvanized box nails may be substituted for common nails of equal pennyweight. Electrogalvanized fasteners shall not be substituted for hot-dip galvanized fasteners. Sheet metal connectors in contact with pressure-treated wood shall be stainless steel or hot-dip galvanized (pre-galvanized per G185 HDG per ASTM A653, or batch post-galvanized). Stainless steel or hot-dip galvanized connectors shall use fasteners of the same material. Aluminum fasteners, connectors or flashing shall not be placed in contact with copper-based pressure-treated wood (e.g., CA or ACQ).

9. Re-tighten all bolts before closing in framing.

SECTION 06 11 00: FRAMING LUMBER

1. All framing lumber shall be Douglas Fir-Larch graded per WCLIB Grading Rules. All lumber shall be surfaced dry (SD, MC 19 or less) or kiln dried (KD, MC 19 or less), except that heavy timber posts may be surfaced green. Plywood edge nail spacing in surfaced green posts shall be decreased by one third (i.e., number of nails increased 50%). MC = Maximum moisture content at initial use, in percent.

2. Grading:

Item	Sizes	Grade
Studs & Posts	4x	No. 1
Beams	3x, 4x	No. 1
Floor Joists	2x	No. 2
Roof Joists	2x	No. 2
T & G Decking	Any	Select
Ledgers	2x	No. 2
Ledgers	3x, 4x, 6x	No. 1
Blocking & Nailers	2x	Construction
Blocking & Nailers	3x, 4x, 6x	Construction
Plates & Misc.	2x	No. 2 or Construction

3. See Drawings for bridging and blocking requirements.

4. Refer to minimum fastening schedule in CBC Table 2304.10.1, except where more restrictive requirements are given on the drawings.

SECTION 06 12 00: WOOD STRUCTURAL PANELS: PLYWOOD AND ORIENTED STRAND BOARD (OSB)

1. Each wood structural panel (plywood) shall be identified with the appropriate grade and APA trademark and shall meet the requirements of the latest edition of the U.S. Department of Commerce Voluntary Product Standard PS-1 (plywood). All panels that have any edge or surface permanently exposed to the weather shall be classified Exterior. Panel thickness, grade, and group number shall be at least equal to that shown on the drawings.

2. Install panels with 1/8" gap between panels to allow moisture swelling and thermal expansion without buckling the panels.

3. Floor sheathing:

   1. APA Rated Sturd-I-Floor, Exposure 1, unless otherwise noted on the drawings.

   2. Thickness as shown on the drawings.

   3. Span rating as a function of panel thickness:
      1. 20 OC for 5/8" nominal (19/32" actual),
      2. 24 OC for 3/4" nominal (23/32" actual),
      3. 32 OC for 7/8" nominal (27/32" actual), and
      4. 48 OC for 1-1/8" nominal (25/32" actual).

   4. Long panel edges to be tongue and groove. Tongue and groove edges may be omitted where edges are blocked.

   5. Panels to be laid with long panel edges perpendicular to floor joists. Block edges where noted on the drawings. All cut panels to be equal or greater than 24 by 48 inches. Apply a continuous bead of glue to all floor joists before setting floor plywood.

STRUCTURAL DRAWING SHEET INDEX

S1.01	ABBREVIATIONS, SHEET INDEX & STRUCTURAL NOTES
S2.01	SECOND FLOOR PLAN
S2.02	THIRD FLOOR PLAN
S2.03	ENLARGED BALCONY PLANS
S6.01	STRUCTURAL DETAILS

GELFAND PARTNERS ARCHITECTS
165 10th Street, Suite 100
San Francisco, CA 94103
415.346.4040 | www.gelfand-partners.com

Client

Housing Authority
of The City of Alameda
701 Atlantic Avenue
Alameda, CA 94501-2161
T: (510) 747-4340

TIPPING
1906 Shattuck Avenue, Berkeley, CA 94704
510.549.1906 www.tippingstructural.com

REGISTERED PROFESSIONAL ENGINEER
MARC ANDREW STEYER
No. S6022
Exp. 9-30-24
STRUCTURAL
STATE OF CALIFORNIA

Drawing Record

REV.	DESCRIPTION	DATE
	PERMIT SET	8/25/23

Printed:

Architect

Project

Sheet
ABBREVIATIONS, SHEET INDEX & STRUCTURAL NOTES

S1.01

Plotted: Thursday, August 24, 2023 2:09:39 PM - By: pengyu - Sheet Size: 30x42 - File: X:\2022dwgs\22198-01\struct\22198S1-01.dwg

DocuSign Envelope ID: FC20CC1D-27CE-4697-B47D-B02636483E86

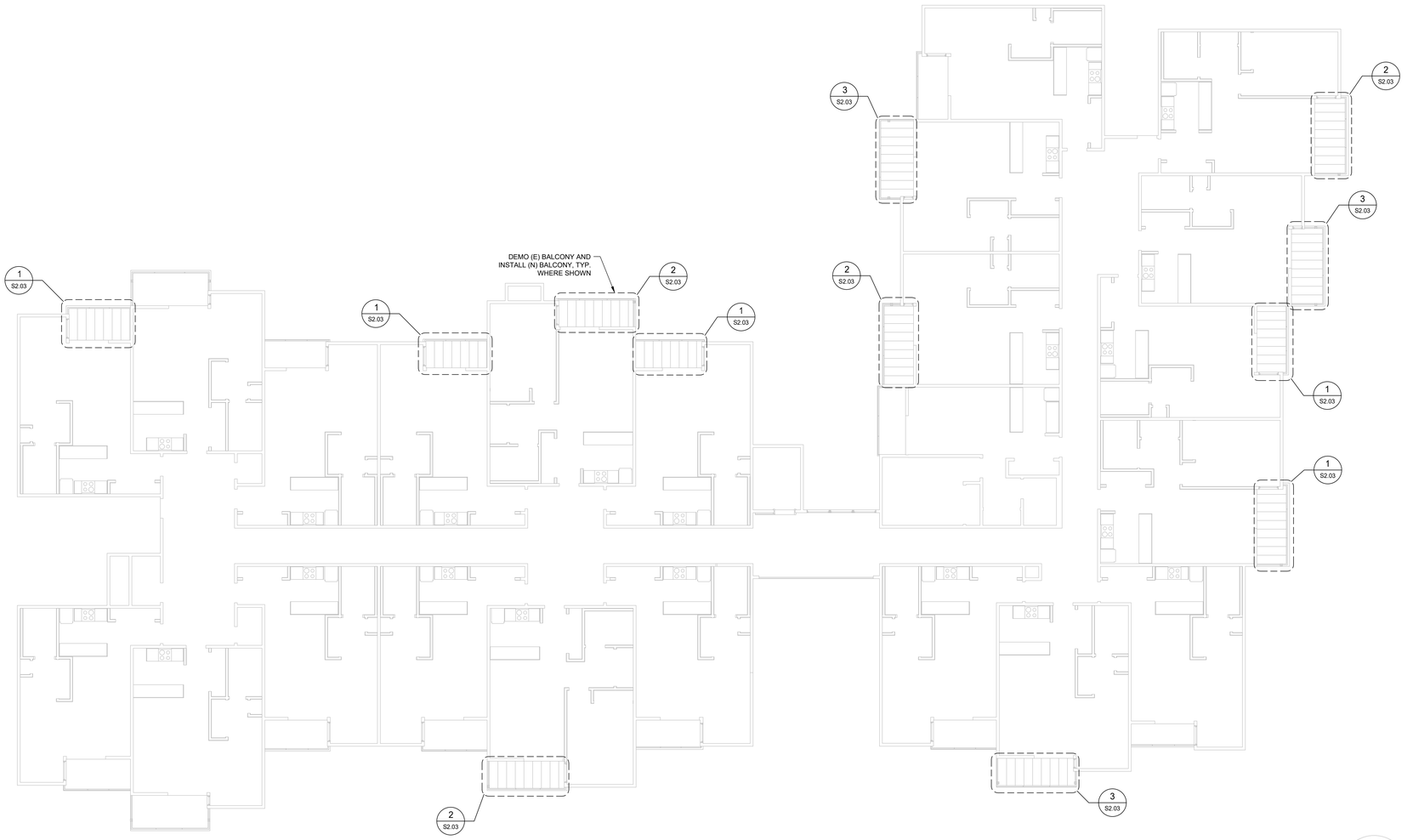

NOTE: CONTRACTOR IS RESPONSIBLE FOR TEMPORARY SHORING DURING DEMOLITION AND CONSTRUCTION.

1
S2.01

SECOND FLOOR PLAN

1/8" = 1'-0"

GELFAND PARTNERS ARCHITECTS
165 10th Street, Suite 100
San Francisco, CA 94103
415.346.4040 | www.gelfand-partners.com

Client

Housing Authority
of The City of Alameda
701 Atlantic Avenue
Alameda, CA 94501-2161
T: (510) 747-4340

TIPPING
1906 Shattuck Avenue, Berkeley, CA 94704
510.549.1906 www.tippingstructural.com

REGISTERED PROFESSIONAL ENGINEER
MARC ANDREW STEGER
No. S6022
Exp. 9-30-24
STRUCTURAL
STATE OF CALIFORNIA

Drawing Record

REV.	DESCRIPTION	DATE
	PERMIT SET	8/25/23

Printed:

Architect

Project

Sheet
SECOND FLOOR PLAN

S2.01

Plotted: Thursday, August 24, 2023 2:09:41 PM - By: pengyu - Sheet Size: 30x42 - File: X:\2022dwgs\22198-01\struct\22198S2-01.dwg

DocuSign Envelope ID: FC20CC1D-27CE-4697-B47D-B02636483E86

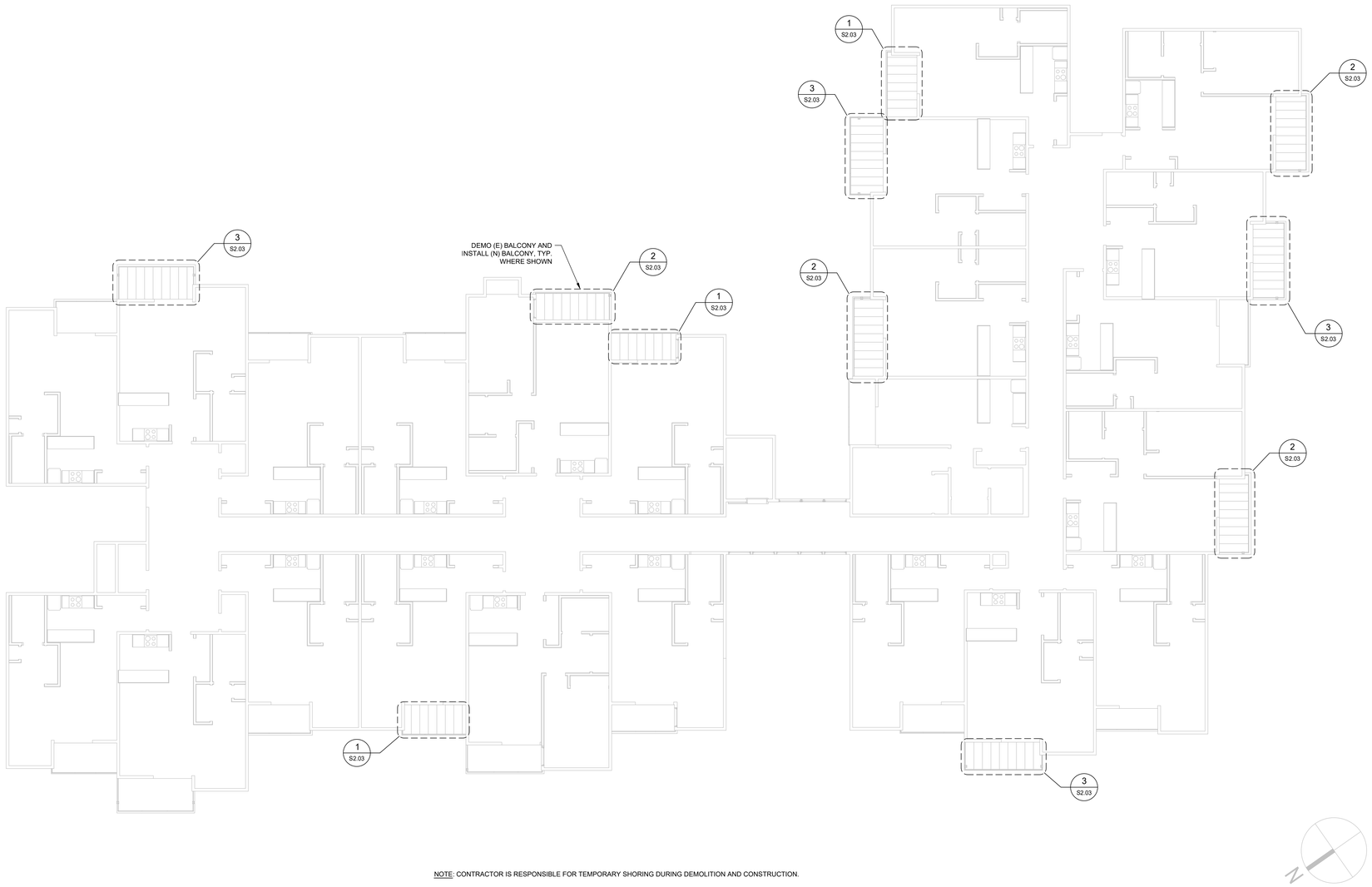

NOTE: CONTRACTOR IS RESPONSIBLE FOR TEMPORARY SHORING DURING DEMOLITION AND CONSTRUCTION.

1
S2.02

THIRD FLOOR PLAN

1/8" = 1'-0"

GELFAND PARTNERS ARCHITECTS
165 10th Street, Suite 100
San Francisco, CA 94103
415.346.4040 | www.gelfand-partners.com

Client

Housing Authority
of The City of Alameda
701 Atlantic Avenue
Alameda, CA 94501-2161
T: (510) 747-4340

TIPPING
1906 Shattuck Avenue, Berkeley, CA 94704
510.549.1906 www.tippingstructural.com

REGISTERED PROFESSIONAL ENGINEER
MARC ANDREW STECKER
No. S6022
Exp. 9-30-24
STRUCTURAL
STATE OF CALIFORNIA

Drawing Record

REV.	DESCRIPTION	DATE
	PERMIT SET	8/25/23

Printed:

Architect

Project

Sheet

THIRD FLOOR PLAN

S2.02

Plotted: Thursday, August 24, 2023 2:09:43 PM - By: pengyu - Sheet Size: 30x42 - File: X:\2022dwgs\22198-01\struct\22198S2-02.dwg

DocuSign Envelope ID: FC20CC1D-27CE-4697-B47D-B02636483E86

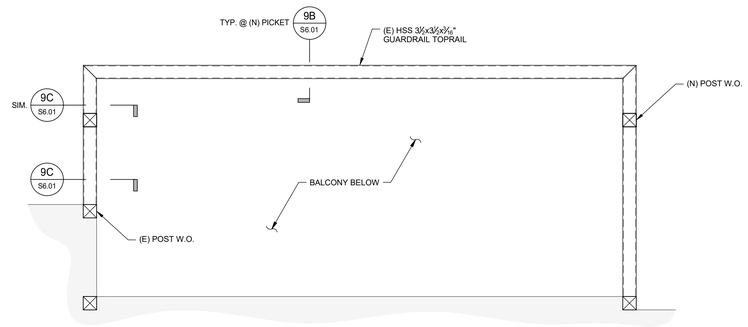

NOTE:
FOR INFO NOT SHOWN, SEE 1/S2.03.

4 / S2.03 RAILING PLAN 3/4" = 1'-0"

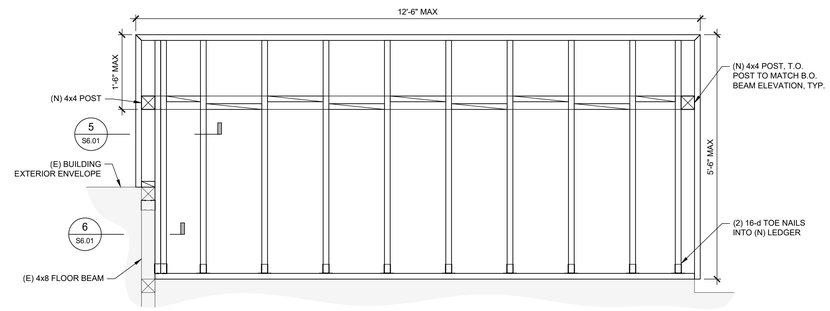

NOTE:
FOR INFO NOT SHOWN, SEE 1/S2.03.

3 / S2.03 TYPE III BALCONY 3/4" = 1'-0"

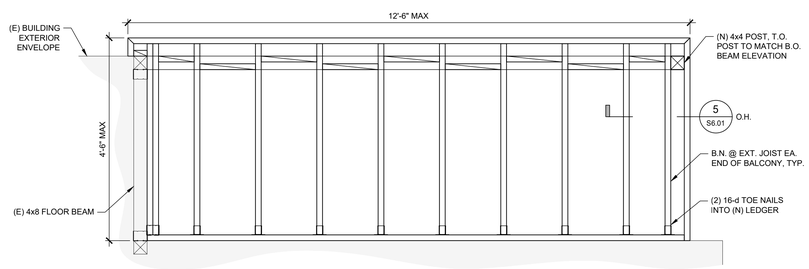

NOTE:
FOR INFO NOT SHOWN, SEE 1/S2.03.

2 / S2.03 TYPE II BALCONY 3/4" = 1'-0"

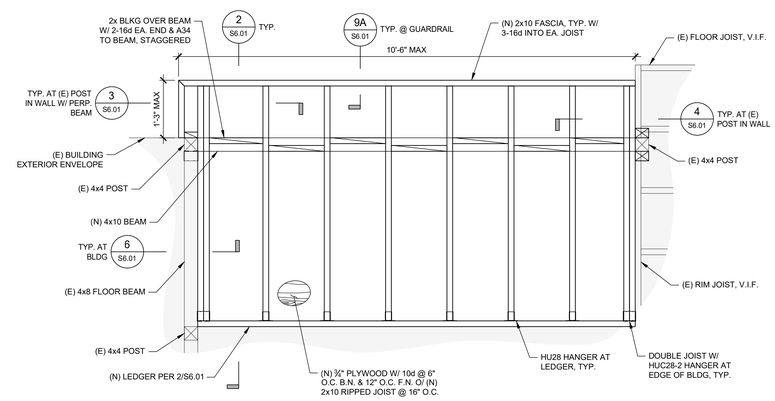

NOTES:
1) CONTRACTOR IS RESPONSIBLE FOR TEMPORARY SHORING DURING DEMOLITION & CONSTRUCTION.
2) VERIFY EXISTING CONDITIONS IN FIELD. IF (E) FRAMING & OTHER ELEMENTS DO NOT MATCH THE STRUCTURAL DRAWINGS, CONTACT SEOR FOR DIRECTION.
3) CONTRACTOR SHALL VERIFY SOUNDNESS OF WOOD MATERIAL AT EACH BALCONY. NOTIFY SEOR IF ADDITIONAL DECAY IS ENCOUNTERED.

1 / S2.03 TYPE I BALCONY 3/4" = 1'-0"

GELFAND PARTNERS ARCHITECTS
165 10th Street, Suite 100
San Francisco, CA 94103
415.346.4040 | www.gelfand-partners.com

Client

Housing Authority
of The City of Alameda
701 Atlantic Avenue
Alameda, CA 94501-2161
T: (510) 747-4340

TIPPING
1906 Shattuck Avenue, Berkeley, CA 94704
510.549.1906 www.tippingstructural.com

REGISTERED PROFESSIONAL ENGINEER
MARC ANDREW STEYER
No. S6022
Exp. 9-30-24
STRUCTURAL
STATE OF CALIFORNIA

Drawing Record

REV.	DESCRIPTION	DATE
	PERMIT SET	8/25/23

Printed:

Architect

Project

Sheet

ENLARGED
BALCONY
PLANS

S2.03

Plotted: Thursday, August 24, 2023 2:09:45 PM - By: pengyu - Sheet Size: 30x42 - File: X:\2022dwgs\22198-01\struct\22198S2-03.dwg

DocuSign Envelope ID: FC20CC1D-27CE-4697-B47D-B02636483E86

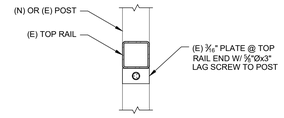

NOTE: PROVIDE 5/8" Ø THRU BOLT WHERE HANDRAIL @ E.S. OF POST

C — TOP RAIL TO WOOD POST

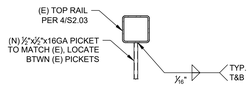

B — (N) PICKET TO (E) TOP RAIL CONNECTION

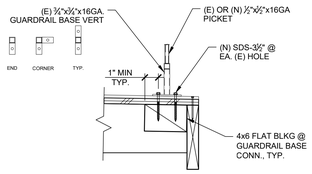

NOTE: SEE 2/S6.01 FOR INFORMATION NOT SHOWN

A — TYP. GUARDRAIL BASE CONNECTION

9 / S6.01 — RAILING DETAILS — 1-1/2" = 1'-0"

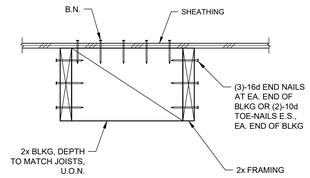

8 / S6.01 — TYPICAL BLOCKING @ JOISTS — 1-1/2" = 1'-0"

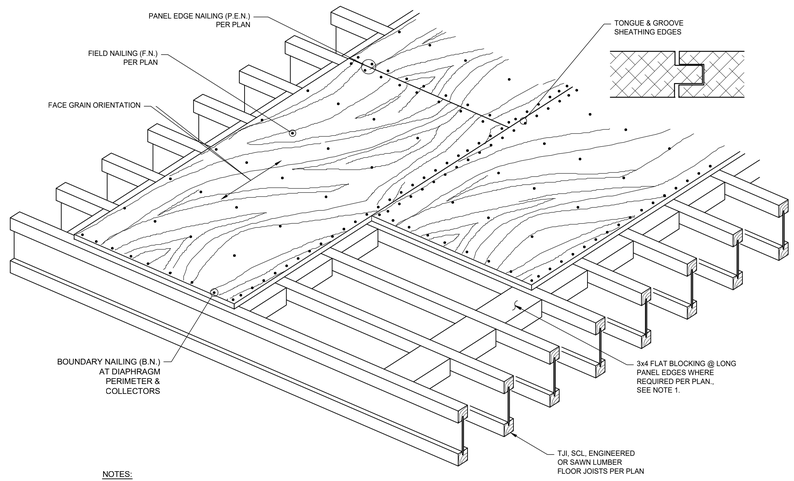

NOTES:

1. 2x4 FLAT BLOCKING CAN BE USED WHERE PANEL EDGE NAILING IS GREATER THAN 10d AT 3" O.C.
2. WHERE PLYWOOD OR OSB IS NAILED TO 2x FLAT BLOCKING W/ 10d, INCREASE NUMBER OF NAILS BY 18%, i.e., DECREASE NAIL SPACING BY A FACTOR OF 0.85, OR USE 3x FLAT BLOCKING
3. GLUE PLYWOOD TO ALL JOISTS AT FLOORS, NOT REQUIRED AT ROOF
4. STAGGER PANEL JOINTS AS SHOWN.
5. PANEL SHEATHING CLIPS CAN BE USED IN LIEU OF TONGUE & GROOVE EDGES AT ROOF SHEATHING AT CONTRACTOR'S OPTION. PROVIDE MINIMUM ONE CLIP PER JOIST BAY.
6. SEE 2/S6.01 FOR ADDITIONAL DIAPHRAGM NAILING REQUIREMENTS.

7 / S6.01 — FLOOR OR ROOF SHEATHING NAILING — 1-1/2" = 1'-0"

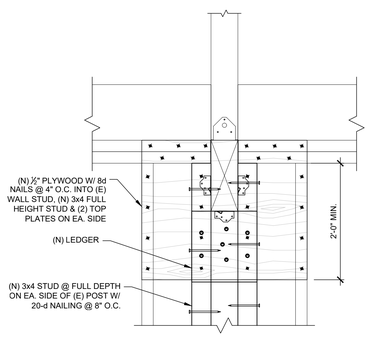

B — (E) WALL FRAMING ELEVATION

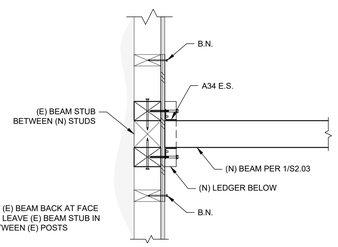

NOTE: CUT (E) BEAM BACK AT FACE OF WALL & LEAVE (E) BEAM STUB IN PLACE BETWEEN (E) POSTS

A — PLAN DETAIL

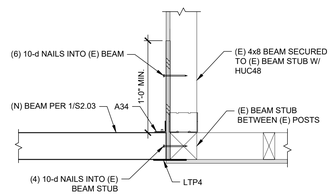

NOTE: CUT (E) BEAM BACK AT FACE OF WALL & LEAVE (E) BEAM STUB IN PLACE BETWEEN (E) POSTS

A — PLAN DETAIL

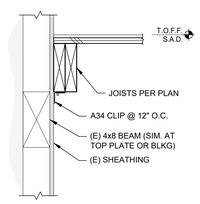

6 / S6.01 — DOUBLE JOIST AT BUILDING WALL CONNECTION ELEVATION — 1-1/2" = 1'-0"

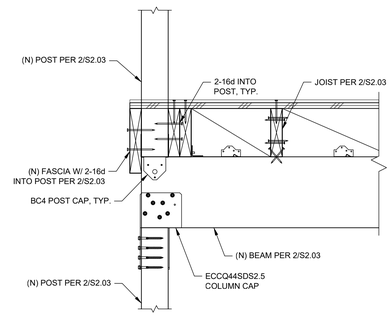

5 / S6.01 — EXTERIOR (N) BEAM TO (N) POST CONNECTION — 1-1/2" = 1'-0"

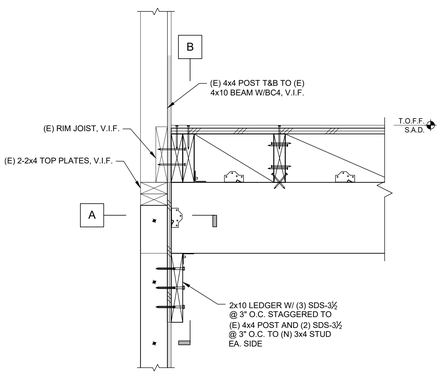

NOTES:

1. ADD (N) 3x4 FULL DEPTH STUD IN WALL BEFORE CUTTING (E) BEAM.
2. SEE 3/S6.01 FOR INFO NOT SHOWN.

4 / S6.01 — INTERIOR (N) BEAM TO (E) COLUMN CONNECTION W/O (E) FLOOR BEAM — 1-1/2" = 1'-0"

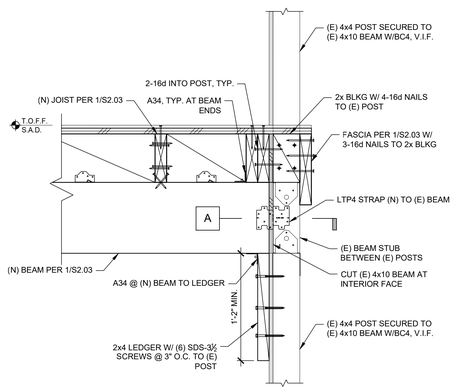

3 / S6.01 — INTERIOR (N) BEAM TO (E) COLUMN CONNECTION W/ (E) FLOOR BEAM — 1-1/2" = 1'-0"

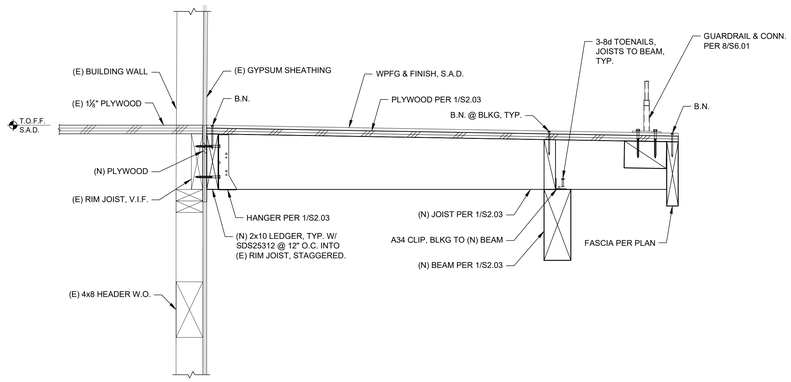

2 / S6.01 — BALCONY SECTION AT INTERIOR FRAMING — 1-1/2" = 1'-0"

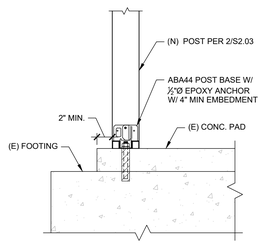

1 / S6.01 — POST BASE CONNECTION TO (E) FOOTING — 1-1/2" = 1'-0"

GELFAND PARTNERS ARCHITECTS
165 10th Street, Suite 100
San Francisco, CA 94103
415.346.4040 | www.gelfand-partners.com

Client

Housing Authority
of The City of Alameda
701 Atlantic Avenue
Alameda, CA 94501-2161
T: (510) 747-4340

TIPPING
1906 Shattuck Avenue, Berkeley, CA 94704
510.549.1906 www.tippingstructural.com

REGISTERED PROFESSIONAL ENGINEER MARC ANDREW STEYER No. S6022 Exp. 9-30-24 STRUCTURAL STATE OF CALIFORNIA

Drawing Record

REV.	DESCRIPTION	DATE
	PERMIT SET	8/25/23

Printed:

Architect

Project

Sheet

STRUCTURAL DETAILS

S6.01

Plotted: Thursday, August 24, 2023 2:09:50 PM - By: pengyu - Sheet Size: 30x42 - File: X:\2022dwgs\22198-01\struct\22198S6-01.dwg

DocuSign Envelope ID: FC20CC1D-27CE-4697-B47D-B02636483E86

ATTACHMENT E
"Sample Contract"

DocuSign Envelope ID: FC20CC1D-27CE-4697-B47D-B02636483E86

HOUSING AUTHORITY OF THE CITY OF ALAMEDA
CONSTRUCTION SERVICES AGREEMENT

This Construction Services Agreement (this "Agreement") is entered into as of _____ (the "Effective Date"), by and between the Housing Authority of the City Alameda, a public body, corporate and politic ("Authority"), and_____, a _____ ("Contractor," and together with Authority, collectively, the "Parties"), with reference to the following facts:

RECITALS

A. These Recitals refer to and utilize certain capitalized terms that are defined in Article 1 of this Agreement. The Parties intend to refer to those definitions in connection with the use of capitalized terms in these Recitals.

B. On November 21, 2023, Authority issued the RFP for the Work. Thereafter, on_____, 2024, Authority selected Contractor to perform the Work in accordance with the RFP.

C. Contractor has represented to Authority that Contractor has the necessary skill and expertise to perform the Work.

D. The Parties wish to enter into this Agreement to memorialize their agreement as to the specific requirements regarding the renovation and modernization project at the Property.

NOW, THEREFORE, the Parties agree as follows:

ARTICLE 1
PURPOSE; DEFINITIONS

Section 1.1 Purpose.

The purpose of this Agreement is to authorize Contractor to take actions necessary to perform the Work on the Property. Contractor hereby agrees to perform the Work in compliance with the terms and conditions of this Agreement, within the time periods provided by the Schedule, and for the costs set forth on the Contractor Schedule of Values.

Section 1.2 Definitions.

The following capitalized terms have the meanings set forth in this Section 1.2 wherever used in this Agreement, unless otherwise provided:

(a) "Acceptance Certificate" shall have the meaning set forth in Section 2.9(b) of this Agreement.

DocuSign Envelope ID: FC20CC1D-27CE-4697-B47D-B02636483E86

(b) "Agreement" shall mean this Construction Services Agreement and all exhibits.

(c) "Application for Payment" shall have the meaning set forth in Section 3.3(b) of this Agreement.

(d) "Architect" shall mean Gelfand Partners Architects.

(e) "Authority" shall mean the Housing Authority of the City of Alameda, a public body, corporate and politic, its successors and assigns.

(f) "Change Order" shall have the meaning set forth in Section 2.11 of this Agreement.

(g) "City" shall mean the City of Alameda, California.

(h) "Contract Documents" shall mean this Agreement (including all exhibits attached hereto), the General Conditions, and the Plans.

(i) "Contracting Officer" shall have the meaning set forth in Section 5.7 of this Agreement.

(j) "Contractor" shall mean_____, a_____.

(k) "Contract Sum" shall have the meaning set forth in Section 3.1(a) of this Agreement.

(l) "Contract Time" shall have the meaning set forth in Section 2.9(b) of this Agreement.

(m) "Cost of the Work" shall mean the costs and expenses incurred by, or on behalf of, Contractor in connection with the performance of the Work, as more particularly described in Section 3.1 of this Agreement.

(n) "DIR" shall mean the State of California Department of Industrial Relations.

(o) "Effective Date" shall have the meaning set forth in the first paragraph of this Agreement.

(p) "General Conditions" shall mean Form HUD-5370 (11/20/2023), General Conditions for Construction Contract, attached to this Agreement as Exhibit E.

(q) "Guaranteed Maximum Price" shall have the meaning set forth in Section 3.1(a) of this Agreement.

DocuSign Envelope ID: FC20CC1D-27CE-4697-B47D-B02636483E86

(r) "HUD" shall mean the United States Department of Housing and Urban Development.

(s) "Notice to Proceed" shall mean the notice to be issued by Authority to Contractor to establish the date for the commencement of the Work.

(t) "Parties" shall mean, collectively, Authority and Contractor.

(u) "Party" shall mean either Authority or Contractor.

(v) "Plans" shall mean the plans and specifications as set forth on Exhibit D.

(w) "Potential Claimants" shall have the meaning set forth in Section 3.4(a)(iii) of this Agreement.

(x) "Property" shall mean the real property located in the City of Alameda commonly known as Anne B. Diament Plaza 920 Park St., Alameda, Ca. 94501., owned by Authority, on which Contractor shall perform the Work.

(y) "Residential Tenants" shall have the meaning set forth in Section 2.7(a)(i) of this Agreement.

(z) "Retention Amount" shall have the meaning set forth in Section 3.3(a) of this Agreement.

(aa) "RFP" shall mean the Request for Proposals, issued by Authority on November 21, 2023, and Contractor's response, dated _____, 2024, each of which are attached to this Agreement as Exhibit L, and incorporated into this Agreement by this reference.

(bb) "Schedule" shall mean the schedule for performance of the Work, attached to this Agreement as Exhibit K, as the Parties may revise from time to time, pursuant to a Change Order.

(cc) "Section 3" shall mean Section 3 of the Housing and Urban Development Act of 1968, 12 U.S.C. 1701u, and its implementing regulations at 24 CFR Part 75.

(dd) "Section 3 Certification" shall mean Contractor's certification regarding Section 3 compliance, a form of which is attached to this Agreement as Exhibit I.

(ee) "Section 3 Policy" shall mean Authority's policy for complying with Section 3, attached to this Agreement as Exhibit I.

(ff) "Subcontractor" shall mean any subcontractor under direct contract with Contractor as more particularly described in Section 2.4(a) of this Agreement.

DocuSign Envelope ID: FC20CC1D-27CE-4697-B47D-B02636483E86

(gg) "Substantial Completion" shall mean the stage in the progress of the Work where the work is sufficiently complete in accordance with this Agreement and all other Contract Documents so that the work may be utilized for its intended use as evidenced by the Acceptance Certificate.

(hh) "Work" shall mean, collectively: (i) Demo, dispose and replace (24) exterior balconies and all associated work shown on the Gelfand Partners Architects plans dated 8/25/2023 on the Property, as more particularly set forth in Exhibit A, and as set forth on the Plans; and (ii) all other construction and services required by the Contract Documents or reasonably inferable by Contractor as necessary to produce the results intended by the Contract Documents (including all labor, materials, equipment, and services provided or to be provided by Contractor to fulfill Contractor's obligations).

Section 1.3 Exhibits.

The following exhibits are attached to this Agreement and incorporated into this Agreement by this reference:

Exhibit A: Scope of Work

Exhibit B: List of Subcontractors

Exhibit C: Contractor Schedule of Values; Qualifications and Exclusions

Exhibit D: List of Plans

Exhibit E: General Conditions for Construction Contract (Form HUD-5370)

Exhibit F: Insurance Requirements

Exhibit G: Davis Bacon Wage Rates

Exhibit H: AHA Section 3 Policy

Exhibit I: Section 3 Certification

Exhibit J: Notice for Affirmative Action to Ensure Equal Employment Opportunity under Executive Order 11246, and the Standard Federal Equal Employment Opportunity Construction Contract Specifications

Exhibit K: Schedule

Exhibit L: Documents incorporated for reference from RFP

DocuSign Envelope ID: FC20CC1D-27CE-4697-B47D-B02636483E86

ARTICLE 2
CONSTRUCTION SERVICES

Section 2.1 Scope of Work.

Contractor shall perform the Work as set forth in the Plans provided to Contractor by Authority.

Section 2.2 Responsibility for Performance of the Work.

(a) Contractor Responsibilities. Contractor shall manage all activities associated with the performance of the Work in accordance with this Agreement, including, but not limited to, the following activities:

(i) In addition to the other requirements set forth herein, Contractor shall employ a full-time superintendent to be on the jobsite at all times during the progress of the Work. The superintendent shall represent Contractor, and communications given to the superintendent shall be as binding as if given to Contractor. Important communications shall be confirmed in writing. Other communications shall be similarly confirmed on written request in each case. Authority shall have the right to approve the superintendent. If Contractor removes the superintendent, Authority shall have the right to approve the replacement superintendent, which shall not be unreasonably denied.

(ii) Contractor shall conduct weekly job site meeting with Authority's representative to keep Authority informed of the progress of the Work. Contractor shall provide Authority copies of minutes of any job site meetings.

(iii) Contractor shall be solely responsible for and have control over the means, methods, techniques, sequences and procedures and for coordinating all portions of the Work under this Agreement.

(iv) Subject to Authority's obligation to disburse funds set forth in Section 3.3(c) of this Agreement, Contractor shall make, or cause to be made, payment of all monies due and legally owing to all persons doing any work, furnishing any materials or supplies, or renting any equipment to Contractor or any of its Subcontractors in connection with performance of the Work, within ten (10) calendar days following receipt of payment from Authority.

(v) Contractor shall be responsible to Authority for acts and omissions of Contractor's employees, Subcontractors and their agents and employees, and other persons or entities performing portions of the Work for or on behalf of Contractor or any of its Subcontractors and for any damages, losses, costs, expenses, including but not limited to attorneys' fees resulting from such acts and omissions. In accordance with Section 1810 of the California Labor Code, Contractor acknowledges that eight (8) hours of labor constitutes a legal day's work.

DocuSign Envelope ID: FC20CC1D-27CE-4697-B47D-B02636483E86

In no event shall Contractor contract with any party which has been debarred or suspended by HUD under 29 CFR 5.12 or by the State of California's Department of Industrial Relations, Division of Labor Standards Enforcement (DLSE). A current list of individuals the DLSE is available at https://www.dir.ca.gov/dlse/debar.html.

(b) Use of Site. Only materials and equipment that are to be used directly in the Work shall be brought to and stored on the Property by Contractor. After equipment is no longer required for the Work, it shall be promptly removed from the Property. Contractor shall take reasonable precautions and measures to protect materials and equipment stored at the Property from weather, theft, and damage, and Contractor shall be solely liable for any loss or damage to such materials and equipment. Contractor shall ensure that the Work, at all times, is performed in a manner that affords reasonable access, both vehicular and pedestrian, to the site of the Work and all adjacent areas. The Work shall be performed, to the fullest extent reasonably possible, in such manner that public areas adjacent to the Property of the Work shall be free from all debris, building materials, and equipment likely to cause hazardous conditions.

Section 2.3 Contractor Representations and Warranties.

(a) Representations and Warranties. Contractor represents and warrants the following to Authority (in addition to any other representations and warranties contained in this Agreement) as a material inducement to Authority to execute this Agreement:

(i) Contractor, and to the best of Contractor's knowledge, its Subcontractors, are financially solvent, able to pay all debts as they mature, and possessed of sufficient working capital to complete the Work and perform all obligations hereunder;

(ii) Contractor is able to furnish the plant, tools, materials, supplies, equipment, and labor itself or through its Subcontractors required to complete the Work and perform its obligations hereunder, and has sufficient experience and competence to do so;

(iii) Contractor is authorized to do business in the State of California and is properly licensed by all necessary governmental and public and quasi-public authorities having jurisdiction over Contractor and over the Work. Contractor's license number is _____;

(iv) Contractor's execution of this Agreement and performance thereof is within Contractor's duly authorized powers;

(v) Contractor is a sophisticated contractor who possesses a high level of experience and expertise in the business administration, construction, construction management, and superintendence of projects of the size, complexity, and nature of this particular project, and will perform the Work with the care, skill, and diligence of such a contractor;

(vi) Except as disclosed to Authority in writing, there are no claims, actions, investigations, suits, or proceedings pending affecting Contractor's performance under the Contract Documents; and

DocuSign Envelope ID: FC20CC1D-27CE-4697-B47D-B02636483E86

(vii) All financial information delivered to Authority, including all information relating to the financial condition of Contractor or any of its partners, joint venturers, or members (as applicable), fairly and accurately represents the financial condition being reported on as of its date. All such information is prepared in accordance with generally accepted accounting principles consistently applied, unless otherwise noted. There has been no material adverse change in the financial condition of any of the persons described above reported at any time to Authority, except as previously disclosed to Authority in writing in later financial information and found acceptable to Authority in its sole and absolute discretion.

(b) Survival. The foregoing representations and warranties shall survive the execution and delivery of this Agreement and any termination of this Agreement.

Section 2.4 Subcontractors.

(a) List of Subcontractors. Contractor's list of approved Subcontractors for the performance of the Work, and each of the Subcontractor's license numbers, is set forth on Exhibit B. In the event Contractor desires to replace any Subcontractor pursuant to Section 4107 of the California Public Contract Code, then Contractor shall notify Authority in writing, and Authority shall then follow the process set forth in Section 4107(a) of the California Public Contract Code. Thereafter, if requested by Authority in writing, Contractor shall provide Authority with a draft copy of its form subcontract, and disclose to Authority the name, trade, and subcontract amounts for each subcontractor prior to the proposed subcontractor's performance of any portion of the Work. Subcontractors shall have the required licenses and expertise necessary to perform the proposed subcontract work. Authority will promptly reply to Contractor in writing stating whether or not Authority, after due investigation, has reasonable objection to any such proposed person or entity. Provided Authority has not objected to the proposed subcontractor, such person or entity shall be deemed a "Subcontractor." Contractor shall not contract with a proposed person or entity to whom Authority has made reasonable and timely objection, or an entity that has been debarred by the DIR. If any contract between Contractor and a Subcontractor is materially altered so that it differs from the form subcontract provided to Authority with regard to terms other than (1) the description of the Work to be performed pursuant to the subcontract, and (2) the subcontract price, that subcontract shall be submitted to Authority for its review prior to the commencement of applicable portion of the Work.

(b) Subcontracts. By appropriate agreement Contractor shall require each Subcontractor, to the extent of the work to be performed by the Subcontractor, to be bound to Contractor by terms of this Agreement and to assume toward Contractor all the obligations and responsibilities, including the responsibility for safety of the Subcontractor's work, which Contractor, by this Agreement, assumes toward Authority. Each subcontract shall, among other matters: (i) require that the work be performed in accordance with the requirements of this Agreement; (ii) require the Subcontractor to carry and maintain liability insurance in accordance with this Agreement; and, (iii) shall specifically provide that Authority is an intended third-party beneficiary of such subcontract and that the Subcontractor recognizes the rights of Authority to take an assignment of its subcontract after termination of this Agreement by Authority on default of Contractor.

DocuSign Envelope ID: FC20CC1D-27CE-4697-B47D-B02636483E86

Section 2.5 Payment and Performance Bonds.

Prior to commencement of the Work, Contractor shall deliver to Authority copies of labor and material (payment) bonds and performance (general contractor bond) bonds for the Work in an amount equal to one hundred percent (100%) of the scheduled costs of the Work. Said bonds shall comply with the requirements of Section 9550 et seq. of the California Civil Code and shall be issued by an insurance company which is licensed to do business in California and has a rating equivalent to AAA or AA+ by an insurance company listed in the current year's list of "Surety Companies Acceptable on Federal Bonds" as published in the Federal Register by the Audit Staff Bureau of Accounts, U.S. Treasury Department, and for amounts which are not in excess of the acceptable amount set forth on such list for the respective surety. The bonds shall name Authority as a co-obligee or assignee.

Section 2.6 Right of Entry; Job Site Facilities.

(a) Right of Entry. Authority hereby grants Contractor a right to enter the Property for the purpose of performing the Work. This right of entry may be exercised by Contractor, and its employees, agents, and Subcontractors. This right of entry will terminate upon the sooner to occur of: (i) completion of the Work; or (ii) the occurrence of an event of default under this Agreement.

(b) No Liens. Contractor and all Subcontractors and all material suppliers are prohibited from placing any liens on the Property; provided, however nothing in this Section 2.6(b) shall be deemed to prohibit the filing of a stop notice.

(c) Signs. Subject to prior approval of Authority as to size, design, type and location, and to local regulations, Contractor and its Subcontractors may erect temporary signs for purposes of identification and, to the extent applicable, controlling traffic. Contractor shall furnish, erect, and maintain such signs as may be required by safety regulations and as necessary to safeguard life and property. Contractor shall comply with all applicable CAL OSHA standards.

(d) Job Site Facilities. In addition to the requirements set forth in Section 17 of the General Conditions, Contractor may provide a jobsite trailer and portable sanitary facilities. This office will be located so as to cause no interference to any Work to be performed on the Property. Contractor shall consult with Authority with regard to location. Unless otherwise agreed to by the Parties, upon completion of the Work, Contractor shall remove all such temporary structures and facilities from the Property. On-site storage will be permitted, as a convenience to Contractor, in areas designated by Authority for such purposes. Contractor shall take reasonable security measures to protect against theft and vandalism. Contractor is responsible for Contractor owned tools and equipment. Except for damage due to Contractor's negligence or willful misconduct, damage or vandalism to the Improvements, products at the Property, in storage or in transit shall be covered by the builder's risk policy, described in Section 7.19 of this Agreement. Contractor may, at its option and expense, rent off-site facilities for the storage and security of its materials.

DocuSign Envelope ID: FC20CC1D-27CE-4697-B47D-B02636483E86

Section 2.7 Safety Precautions and Programs.

(a) Contractor Responsibility. In addition to the requirements set forth in Section 13 of the General Conditions, Contractor shall be responsible for initiating, maintaining and supervising all safety precautions and programs in connection with the performance of the Work and for providing safe conditions for the performance of the Work. Authority shall have no liability or responsibility for the physical condition or safety of the site, or any improvements made by Contractor and located on the Property until acceptance of the Work by Authority as evidenced by the Acceptance Certificate more particularly described in Section 2.9(b) of this Agreement. Contractor shall take reasonable precautions for safety of, and shall provide reasonable protection to prevent damage, injury or loss to:

(i) employees at the Property and other persons who may be affected thereby, including, but not limited to the tenants of the residential units located at the Property (collectively, the "Residential Tenants");

(ii) the materials and equipment to be used in connection with the performance of the Work, whether in storage on or off the site, under care, custody or control of Contractor or Contractor's Subcontractors or sub-subcontractors; and

(iii) other property at the site or adjacent thereto, such as trees, shrubs, lawns, walks, pavements, roadways, structures and utilities not designated for removal, relocation or replacement in the course of the Work.

(b) Residential Tenants. Contractor acknowledges that the Residential Tenants shall be occupying the portions of the Property above the portions of the Property where the Work will be performed. Contractor shall take all reasonable precautions to ensure that the Work is performed in such a manner so as not to endanger, threaten, or impair the safety of Residential Tenants or their guests and invitees, and shall construct and maintain reasonable safeguards as required by the condition and progress of the Work. Contractor shall take all reasonably available efforts to eliminate unnecessary noise, dust, or obstructions during the performance of the Work.

(c) Utilities. In the event that the performance of the Work requires existing utilities (including, but not limited to, water, heat, electricity, or telecommunications) to be shut-off, then Contractor shall not cause such utilities to be shut off until: (i) Contractor has notified Authority of such requirement, and (ii) Authority has notified the Residential Tenants of such requirement in accordance with the Residential Tenants' leases. In such event Contractor shall use commercially reasonable efforts to minimize the time period that any utility serving the Property is shut-off.

(d) Notices. Contractor shall give notices and comply with applicable laws, ordinances, rules, regulations and lawful orders of public authorities bearing on safety of persons or property or their protection from damage, injury or loss. Contractor shall erect and maintain, as required by existing conditions and performance of the Work, reasonable safeguards for safety

DocuSign Envelope ID: FC20CC1D-27CE-4697-B47D-B02636483E86

and protection, including posting danger signs and other warnings against hazards, promulgating safety regulations and notifying owners and users of adjacent sites and utilities.

(e) Explosives. When use or storage of explosives or other hazardous materials or equipment or unusual methods are necessary for performance of the Work, Contractor shall exercise utmost care and carry on such activities under supervision of properly qualified personnel. Contractor shall also give Authority reasonable advance notice.

(f) Damage. Contractor shall promptly remedy damage and loss to property referred to in Sections 2.7(a)(ii) and (iii) above, to the extent caused by Contractor, a Subcontractor, a sub-subcontractor, or anyone directly or indirectly employed by any of them, or by anyone for whose acts they may be liable and for which Contractor is responsible under Sections 2.7(a)(ii) and (iii), except damage or loss attributable to acts or omissions of Authority and not attributable to the fault or negligence of Contractor.

(g) No Overloading. Contractor shall not load or permit any part of the Work or site to be loaded so as to endanger its safety.

(h) Suspension. When all or a portion of the Work is suspended for any reason, Contractor shall securely fasten down all coverings and protect the Improvements, as necessary, from injury by any cause, including, but not limited to rain or other weather conditions.

(i) Notice to Authority. Contractor shall promptly report in writing to Authority all accidents arising out of or in connection with the Work that caused death, serious personal injury, or serious property damage (other than the demolition of any existing improvements on the Property as set forth in the Plans), giving full details and statements of any witnesses. In addition, if death, serious personal injuries or serious damages are caused, the accident shall be reported immediately by telephone or messenger to Authority.

Section 2.8 Conditions Precedent to Commencement of the Work.

(a) Conditions. Contractor shall cause the commencement of Work by no later than the date set forth in a Notice to Proceed issued by Authority; provided, however, Authority shall not be under any obligation to issue a Notice to Proceed until satisfaction of the following conditions precedent:

(i) There exists no Default nor any act, failure, omission or condition that would constitute an event of Default under this Agreement.

(ii) Contractor has furnished Authority with evidence of the bonds meeting the requirements of Section 2.5 of this Agreement.

(iii) Contractor has executed and delivered to Authority all documents, instruments, and policies required by Authority pursuant to this Agreement.

DocuSign Envelope ID: FC20CC1D-27CE-4697-B47D-B02636483E86

(iv) Contractor has furnished Authority with evidence of the insurance coverage meeting the requirements of Section 2.19 of this Agreement.

(v) Contractor has secured all necessary permits, fees and licenses as set forth in Section 2.12(a) of this Agreement.

(b) Termination. If Contractor has not satisfied the conditions precedent set forth in this Section 2.8 by the earlier of: (i) the date set forth in the Notice to Proceed; or (ii) December 1, 2023, then such failure shall constitute a default as set forth in Section 4.2 of this Agreement, and Authority may, in its sole discretion, terminate this Agreement. In the event of such termination neither Party shall have any continuing liability or obligations except for continuing indemnities provided elsewhere in this Agreement. In the event of such termination, the Parties agree and acknowledge that, for the avoidance of doubt, Section 34 of the General Conditions shall not apply.

Section 2.9 Completion of the Work.

(a) Compliance with Schedule. Contractor shall perform the Work in strict accordance with the Schedule submitted to and accepted by Authority. Contractor shall have the sole and exclusive responsibility for completing the Work according to the Schedule. Failure to materially comply with the Schedule shall be considered a breach of this Agreement. Any proposed revisions to the Schedule which would affect Contract Time shall be submitted by Contractor pursuant to the Change Order procedure set forth in Section 2.11 of this Agreement. If Authority reasonably determines that the performance of the Work has not materially reached the level of completion set forth in the Schedule or the Contract Documents (taking into account any corrective schedule action(s) proposed by Contractor including, but not limited to, resequencing tasks or lags to obtain compliance with the Schedule), then Authority shall have the right to require Contractor to take all measures necessary to expedite the Work in order to materially comply with the Schedule including, but not limited to, working additional shifts or overtime, supplying additional labor, equipment, facilities, and other similar measures. Authority's right to require such measures is solely for the purpose of ensuring Contractor's compliance with the Schedule. Contractor shall not be entitled to an adjustment in the Contract Sum in connection with such measures required by Authority. Authority may exercise the rights furnished in this Section 2.9(a) as frequently as Authority deems necessary to ensure that Contractor's performance of the Work will comply with the Contract Time.

(b) Acceptance Certificate. Subject to Section 32(b) of the General Conditions, Contractor shall diligently prosecute the Work to completion, and shall cause the Substantial Completion of the Work as set forth in the Schedule, and within the time period established in Section 25 of the General Conditions (the "Contract Time"). Upon Substantial Completion of the Work Contractor shall submit to Authority a certification from Architect stating that the Work has been completed in accordance with the Plans. Upon (1) submission of Architect's certification, (2) inspection by Authority and a determination by Authority in its reasonable discretion Contractor has reached Substantial Completion in compliance with this Agreement, and (3) at Authority's discretion, completion of an independent cost certification of the work to be prepared and paid for by Authority, Authority shall certify in writing that the

DocuSign Envelope ID: FC20CC1D-27CE-4697-B47D-B02636483E86

Work is substantially complete by executing and recording against the Property a notice of completion and acceptance of work (the "Acceptance Certificate").

Section 2.10 Delay and Extension of Time.

(a) Delay. Except as set forth below, the occurrence of events that delay the Work shall not excuse Contractor from achieving Substantial Completion within the Contract Time. The Contract Time may be extended by Change Order for each calendar day Contractor is delayed in the commencement or progress of the Work provided that Contractor demonstrates that the following conditions have been met:

(i) At the time, the event causing the delay commences, no event of default (as described in Section 4.2 of this Agreement) exists;

(ii) Contractor demonstrates that the delay will have a material adverse impact on the critical path of the then current Schedule;

(iii) The delay is not caused by Contractor;

(iv) The delay could not be (or have been) limited or avoided by Contractor's timely notice to Authority of the delay or reasonable likelihood that the delay would occur;

(v) The delay is of a duration of more than one calendar day; and

(vi) The delay is caused by one, or more, of the events or conditions set forth in Section 32(b)(1) of the General Conditions.

(b) Change Order. Provided that such conditions set forth above are satisfied, the Contract Time may be extended by Change Order as set forth in Section 2.11 of this Agreement.

Section 2.11 Change Orders.

Changes in the Work may be accomplished after execution of this Agreement, and without invalidating this Agreement by Change Order, subject to the limitations stated in Section 29 of the General Conditions (each, a "Change Order"). Agreement on any Change Order shall constitute a final settlement of all matters relating to the change in the work that is the subject of the Change Order, including, but not limited to, all direct and indirect costs associated with such change and any and all adjustments to the Contract Sum and the Contract Time (if any). Contractor shall use the AIA Change Order form, or such other form of change order reasonably acceptable to Authority, and shall report requests for Change Orders and Change Order status monthly.

DocuSign Envelope ID: FC20CC1D-27CE-4697-B47D-B02636483E86

Section 2.12 Work Pursuant to Permits, Plans and Laws.

(a) Permits. In accordance with Section 12(b) of the General Conditions, Contractor shall obtain, and pay all costs for, all applicable permits, licenses, and authorizations necessary for the Work. The Work shall proceed only after procurement of each permit, license, or other authorization that may be required by any governmental agency having jurisdiction over the Work.

(b) Plans and Laws. Contractor shall cause all the Work performed in connection with this Agreement to be performed in compliance with: (i) the Plans, as approved by the City Building Department, and all governmental approvals and permits; (ii) all applicable laws, ordinances, rules and regulations of federal, state, or municipal governments or agencies now in force or that may be enacted hereafter, including (without limitation and where applicable) prevailing wage provisions of the federal Davis-Bacon Act (as further set forth in Section 46 of the General Conditions), and its implementing rules and regulations, and the prevailing wage provisions of the Section 1720, et seq. of the California Labor Code; and (iii) all directions, rules and regulations of any fire marshal, health officer, building inspector, or other officer of every governmental agency now having or hereafter acquiring jurisdiction. In accordance with Section 1104 of the California Public Contract Code, Contractor shall review the Contract Documents, and, in the event, Contractor discovers any error or omission in the Contract Documents with applicable codes, then Contractor shall promptly notify Authority of such error or omission.

(c) Davis-Bacon Wages and California Prevailing Wages; Payroll Compliance.

(i) The applicable Davis Bacon wage rates are attached to this Agreement as Exhibit G. A copy of the wage decision and any additional classifications shall be posted by Contractor at the Property in a prominent place readily accessible to the workers. Contractor shall and shall cause Subcontractors to pay the higher of: (1) the wages set forth in Exhibit G; or (2) prevailing wages in the performance of the Work as those wages are determined pursuant to Sections 1720 et seq. of the California Labor Code. Regardless of the payment of wages set forth in Exhibit G or pursuant to Sections 1720 et seq. of the California Labor Code, Contractor shall, and shall cause any Subcontractors to: (A) employ apprentices as required by Sections 1777.5 et seq. of the California Labor Code, and the implementing regulations of the DIR, and to comply with the other applicable provisions of Sections 1720 et seq. and Sections 1777.5 et seq. of the California Labor Code, and implementing regulations of the DIR; (B) keep and reta Code; (E) cause its Subcontractors, in all calls for bids, bidding materials and subcontract documents to specify that: (i) no subcontractor may be listed on a bid proposal nor be awarded a contract unless registered with the DIR pursuant to Sections 1725.5 of the California Labor Code; and (ii) the Work is subject to compliance monitoring and enforcement by the DIR; (F) provide Authority all information required by Sections 1773.3 of the California Labor Code, as set forth in the DIR's online form PWC-100 within two (2) calendar days after the Effective Date ; (G) post, or cause its Subcontractors to post job site

DocuSign Envelope ID: FC20CC1D-27CE-4697-B47D-B02636483E86

notices, as prescribed by regulation by the DIR; and (H) cause its Subcontractors to furnish payroll records required by Sections 1776 of the California Labor Code directly to the Labor Commissioner, at least monthly in the electronic format prescribed by the Labor Commissioner.in, and shall cause any Subcontractor to keep and retain, such records as are necessary to determine if such prevailing wages have been paid as required pursuant to Sections 1720 et seq. of the California Labor Code, and apprentices have been employed are required by Sections 1777.5 et seq. of the California Labor Code; (C) post at the Property the applicable prevailing rates of per diem wages (Copies of the currently applicable current per diem prevailing wages are available from the DIR); (D) register, and cause the Subcontractors rehabilitating the Property to be registered as set forth in Sections 1725.5 of the California Labor

(ii) Each Subcontractor and any lower tier subcontractor shall submit through Contractor to Authority weekly certified payrolls for each work week from the time work is started until the Work is completed setting forth, among other things, that each worker has been paid in accordance with Section 2.12(c)(i) of this Agreement. Weekly payrolls shall be completed and submitted promptly to Authority, preferably no later than seven (7) working days following completion of the work week. Monthly progress payments will not be released until all payroll reports are up to date. All workers are to be paid not less than once per week.

(d) Department of Labor Notification. Within ten (10) calendar days of contract award (including subcontracts) for each contract of Ten Thousand and No/100ths Dollars ($10,000.00) or more, Authority is required to send a notice of contract award to the Regional Office of Federal Contract Compliance Programs of the Department of Labor. This notification is required by Executive Order 11246, as amended, and shall include the name, address, and telephone number of the contractor/subcontractor; the employer identification number; the dollar amount of the contract; the estimated start and completion dates; and the project number(s) and community in which the project(s) is located. The above information shall be submitted to Authority, by Contractor, within two (2) working days of receipt of such information as it applies to subcontractors.

Section 2.13 Authority's Right to Stop the Work.

If Contractor fails to correct defective work as required by Article 23 of the General Conditions or fails to carry out the Work in accordance with the Contract Documents, Authority by a written order signed by the Contracting Officer, may order Contractor to stop the Work or any portion thereof until the cause for such order has been eliminated.

Section 2.14 Authority's Right to Carry Out the Work.

If Contractor defaults or neglects to carry out the work in accordance with this Agreement and fails within seven (7) calendar days after receipt of written notice from Authority to commence and continue correction of such defects or neglect with diligence and promptness, Authority may, after seven (7) calendar days following receipt by Contractor of an additional written notice and without prejudice to any other remedy Authority may have, correct such deficiencies. In such case, an appropriate Change Order shall be issued, deducting from the payments then or thereafter due Contractor, the cost of correcting such deficiencies, including

DocuSign Envelope ID: FC20CC1D-27CE-4697-B47D-B02636483E86

compensation for Architect's additional services made necessary by such default, neglect or failure. If the payments then or thereafter due Contractor are not sufficient to cover such amount, Contractor shall pay the difference to Authority.

Section 2.15 Section 3 Compliance.

Contractor shall comply with Sections 38, 39, and 40 of the General Conditions regarding Section 3 and the requirements set forth in AHA Section 3 Policy.

Section 2.16 Equal Opportunity.

Contractor, for itself and its successors and assigns, and transferees agrees that in the performance of the Work it shall comply with the requirements of Section 39 of the General Conditions regarding Equal Employment Opportunity.

Section 2.17 Minority and Women-Owned Business Participation.

Attached to this Agreement as Exhibit J is the Notice for Affirmative Action to Ensure Equal Employment Opportunity under Executive Order 11246, and the Standard Federal Equal Employment Opportunity Construction Contract Specifications. It is the policy of Authority to take positive steps to maximize the utilization of minority and women business enterprises in all contract activity administered by Authority.

Section 2.18 Hazardous Materials.

(a) Contractor Responsibility. Contractor shall not permit any hazardous material or substance to be brought to, or used on, the Property except to the extent such hazardous material or substance is necessary to and customarily used in projects like the Work. Any hazardous material or substance brought or used on the Property by Contractor, any Subcontractor, any material supplier, or any entity for whom any of them is responsible, shall be used, stored and disposed of in compliance with all applicable laws related to such hazardous materials or substances. Any damage to the Property and materials and equipment to be incorporated therein, whether in storage on or off the site, under care, custody or control of Contractor or Contractor's Subcontractors or sub-subcontractors; and other property at the Property or adjacent thereto, such as trees, shrubs, lawns, walks, pavements, roadways, structures and utilities not designated for removal, relocation or replacement in the course of the Work, resulting from the improper storage or use of hazardous materials or substances, shall be remedied by Contractor at its sole cost and expense in accordance with applicable laws. Contractor shall provide Authority notice of any release of hazardous materials or substances at the Property. In no event, however, shall Authority have any responsibility for any substance or material that is brought to the Property by Contractor, any Subcontractor, any material supplier, or any entity for whom any of them is responsible. Contractor agrees not to import any fill that is hazardous, toxic or made up of any items that are hazardous or toxic.

(b) Compliance with Laws. If Contractor's scope of work includes the off-haul or contaminated soil, hazardous materials (including asbestos) remediation, or mold

DocuSign Envelope ID: FC20CC1D-27CE-4697-B47D-B02636483E86

remediation, then Contractor shall comply with the requirements of all applicable federal, state and local laws, and any environmental reports provided to Contractor by Authority, in the removal, transportation and disposal of the materials. Contractor shall obtain all necessary permits for any contaminated soil or hazardous materials or mold removal work. Contractor shall ensure that any Subcontractor performing any removal or remediation work possesses the necessary expertise, insurance and licenses. All contaminated and hazardous material shall be transported to an appropriately permitted facility. Contractor shall and shall cause any Subcontractors performing the removal and remediation work to take all necessary safety precautions during the performance of the Work including but not limited to necessary protection of surrounding areas to prevent the spread of contamination, and the protection of workers performing the removal and remediation work.

(c) Stop Work. If reasonable precautions will be inadequate to prevent foreseeable bodily injury or death to persons resulting from a material or substance, including but not limited to polychlorinated biphenyl (PCB), but specifically excluding lead paint and asbestos (which remediation is contemplated as part of the Work), encountered on the Property by Contractor, Contractor shall, upon recognizing the condition, immediately stop the Work in the affected area and report the condition to Authority in writing.

(d) Rendered Harmless. In the event hazardous materials or substances are found to be present, then Contractor shall take such actions necessary to render such materials or substances harmless. When the material or substance has been rendered harmless, Work in the affected area shall resume upon written agreement of Authority and Contractor. The Contract Time shall be extended appropriately and the Contract Sum shall be increased in the amount of Contractor's reasonable additional costs of shut-down, delay and start-up, which adjustments shall be accomplished pursuant to a Change Order; provided, however, Authority shall have no obligation to execute a Change Order for: (i) any hazardous materials or substances that were previously disclosed to Contractor, prior to the Effective Date; (ii) any condition that does not differ materially from those conditions disclosed to Contractor; or (iii) any hazardous materials or condition known by Contractor.

Section 2.19 Insurance Requirements.

Contractor shall, and shall cause any Subcontractors performing any portion of the Work to maintain insurance of the types described in Exhibit F. The requirements set forth in Exhibit F supersede those set forth in Section 36 of the General Conditions.

Section 2.20 Contractor's Obligations regarding Mechanic's Liens and Stop Notices.

(a) Contractor's Obligation to Maintain Lien-Free Title. Provided that Authority has made payment of undisputed sums due and payable in accordance with this Agreement, if any claim of mechanic's lien or stop notice is filed or made against the real property in connection with the Work, Contractor shall: (i) immediately pay and fully discharge the mechanic's lien or stop notice claim; (ii) commence a civil action pursuant to Sections 9350 et seq. of the California Civil Code, for the summary determination of the mechanic's lien or stop notice; or (iii) may deliver to Authority a release of lien or stop notice by surety bond in a legally

DocuSign Envelope ID: FC20CC1D-27CE-4697-B47D-B02636483E86

sufficient form and amount to discharge the mechanic's lien or stop notice. Contractor shall provide whatever documentation, deposits or surety is reasonably required by the title insurance company providing title insurance on the Work in order to obtain lien-free endorsements prior to Authority's payment of any payment, including any progress payment. If Contractor fails to promptly provide the documentation, deposits, records of payment or surety bonds required by this Section 2.20(a), Authority may: (1) obtain any deposits or surety; or (2) make payments to claimants against the Work, Contractor, Authority, in good faith, as reasonably required to release the mechanic's lien or stop notice claim. Authority may withhold the cost of obtaining such deposits or surety or of making such payments from any payment that would otherwise be due to Contractor. Failure of Authority to withhold any or part of any payment pursuant to this Section 2.20(a) shall not be a waiver of any right of Authority under the Contract. Withholding of any payment or part of any payment by Authority pursuant to this Section 2.20(a) shall not be a breach of this Agreement.

(b) Withholding of Payments Due to Claims of Subcontractors. Provided that Authority has made payment of undisputed sums due and payable in accordance with this Agreement, if any subcontractor, material supplier to the Work, or lower tier subcontractor or material supplier files or serves any claim or lien, stop notice, common count or other demand for payment against Authority, or the real property of the Work, Authority may either (1) withhold from any progress payment or other payment an amount up to one hundred fifty percent (150%) of the amount necessary to satisfy the claim, stop notice, common count, or other demand for payment, including all anticipated costs and fees related to the defense of such claim, including but not limited to attorneys' fees, or (2) release the progress payment or other payment. Failure of Authority to withhold any or part of a progress payment pursuant to this Section 2.20(b) shall not be a waiver of any right of Authority under this Agreement. Withholding of any payment by Authority pursuant to Section 2.20(b) shall not be a breach of this Agreement.

ARTICLE 3
PAYMENT AND RECORD KEEPING REQUIREMENTS

Section 3.1 Contract Sum; Guaranteed Maximum Price.

(a) Contract Sum. Authority shall pay Contractor the Contract Sum in current funds for Contractor's performance of the Work. The "Contract Sum" is the Cost of the Work as defined in this Article 3, plus the Contractor's Fee. The Contract Sum is based on Contractor's Schedule of Values, attached as Exhibit C to this Agreement and incorporated herein. Contractor's Schedule of Values sets forth that the Contract Sum shall not exceed _____and ___/100ths Dollars ($_____ (the "Guaranteed Maximum Price"), subject to any change order approved in writing by Authority in accordance with this Agreement.

(b) Contractor's Actual Costs. Costs as defined herein shall be actual costs paid by Contractor. All payments made by Authority pursuant to this Article 3, whether those payments are actually made before or after the Effective Date, are included within the

DocuSign Envelope ID: FC20CC1D-27CE-4697-B47D-B02636483E86

Guaranteed Maximum Price; provided, however, that in no event shall Authority be required to reimburse Contractor for any portion of the Cost of the Work incurred prior to the issuance of the Notice to Proceed unless Contractor has received Authority's written consent prior to incurring such cost.

(c) No Duplication of Payment. Notwithstanding the breakdown or categorization of any costs to be reimbursed in this Article 3 or elsewhere, there shall be no duplication of payment in the event any particular items for which payment is requested can be characterized as falling into more than one of the types of compensable or reimbursable categories.

Section 3.2 Conditions Precedent to Disbursement of Funds for the Work.

Authority shall not be obligated to make any payment to Contractor or take any other action under this Agreement unless the following conditions are satisfied prior to each such disbursement:

(a) No Default. There exists no Default nor any act, failure, omission or condition that would constitute an event of Default under this Agreement.

(b) Payroll. Authority has received all payroll information required pursuant to Section 2.12(c) of this Agreement; provided, however, Authority shall withhold from any payment an amount proportionate to, or otherwise equal to, the missing payroll information. Authority shall not withhold the full amount of a payment due solely to Contractor's failure to deliver complete payroll information.

(c) Approved Application for Payment. Authority has received, and approved, the Application for Payment in the form set forth in Section 3.3 of this Agreement.

(d) Lien Releases. If requested by Authority, Contractor has provided Authority with waiver and releases from all contractors, Subcontractors, and materialpersons in such form as is acceptable to Authority including conditional waivers from all persons for whose work in the preceding month payment is sought, and unconditional waiver and releases from all persons for whose work payment has been made by Authority (or bonded around by Contractor in the event of a dispute between Contractor and a Subcontractor) in response to Contractor's Application for Payment.

Section 3.3 Application for Payment Process.

(a) Submittal of Application for Payment. Authority shall provide payment to Contractor for the performance of the Work based upon a monthly Application for Payment from Contractor, and approved by Authority, in an amount equal to ninety-five percent (95.00%) of the requested payment amount, and shall retain the balance for payment in accordance with Section 3.4 of this Agreement (the "Retention Amount"), all subject to the requirements set forth in Section 27 of the General Conditions. In the event Authority disapproves a monthly

DocuSign Envelope ID: FC20CC1D-27CE-4697-B47D-B02636483E86

Application for Payment, then Authority shall deliver a written notice of disapproval within seven (7) calendar days after Authority's receipt of the Application for Payment.

(b) Form of Application for Payment. In addition to the requirements set forth in Section 27 of the General Conditions (including Contractors certification requirement), each of Contractor's application for payment (an "Application for Payment") shall: (i) set forth the proposed use of funds consistent with the Contractor Schedule of Values, including the Cost of the Work to be funded; (ii) contain sufficient detail and with sufficient supporting documentation to permit Authority to confirm that the work to be funded by the draw request has been performed, and that Authority may accept such work in accordance with the guidelines established by HUD to the extent applicable; and (iii) be set forth on the AIA form for application of payment, or such other form mutually acceptable to the Parties.

(c) Payment by Authority. Authority shall pay each approved Application for Payment within thirty (30) calendar days after receipt. Notwithstanding any provision of this Agreement to the contrary, including but not limited to Section 27 of the General Conditions, if Authority fails to pay an approved Application for Payment within thirty (30) calendar days after receipt of an undisputed and properly submitted Application for Payment from Contractor, then Authority shall pay interest to Contractor equivalent to the legal rate set forth in subdivision (a) of Section 685.010 of the California Code of Civil Procedure. Contractor and Authority agree and acknowledge that this provision constitutes a summary of Section 20104.50 of the California Public Contract Code.

Section 3.4 Conditions Precedent to Release of Retention Amount.

(a) Conditions Precedent. Authority shall not be obligated to make the disbursements of the Retention Amount or take any other action under this Agreement unless the following conditions are satisfied prior to such disbursement:

(i) There exists no Default nor any act, failure, omission or condition that would constitute an event of Default under this Agreement.

(ii) All labor has been performed in a good workperson-like manner consistent with this Agreement.

(iii) To the maximum extent permitted by law, all persons, firms and corporations, including all laborers, material persons, suppliers and Subcontractors who have furnished equipment, supplied materials or performed work for or in connection with the Work, (the "Potential Claimants"), have been paid or will be paid in full out of the remaining retained percentage; and those persons, firms and corporations have submitted their final statements with an unconditional waiver and release upon final payment. Contractor shall make these waivers available for inspection by Authority. In the event a dispute has arisen between Contractor and one of the parties listed above which prevents Contractor from obtaining the waiver of rights from that party, Contractor may satisfy the requirements of this Section 3.4(a)(iii) by supplying a payment bond issued by a surety licensed to do business in the State of California and acceptable to Authority to remove the effect of any claim against the Property and agree to defend and

DocuSign Envelope ID: FC20CC1D-27CE-4697-B47D-B02636483E86

indemnify Authority against all actions filed by persons who have supplied materials to or performed work for or in connection with this Agreement.

(iv) All portions of the Work (that are the responsibility of Contractor) requiring inspection by any governmental authority have been inspected and approved by such authority and all requisite certificates of occupancy, approvals, licenses and permits (if applicable) that are the responsibility of Contractor, have been issued.

(v) To the extent applicable, Authority has received operating manuals and assignments of warranties from the Contractor, all Subcontractors and materialpersons.

(vi) Thirty (30) calendar days have elapsed from Authority's recordation of the Acceptance Certificate.

(vii) If requested by Authority, Contractor has delivered to Authority a final accounting of the actual Cost of the Work, and the Savings, if any, and/or Authority's accountant has completed a cost certification for the Work.

(viii) All items on the punch-list related to the Work have been completed and accepted by Authority, and Authority has issued an Acceptance Certificate pursuant to Section 2.9 of this Agreement and Section 20 of the General Conditions.

(b) Early Release. Notwithstanding the above, a portion of the Retention Amount may be released to certain Potential Claimants performing work early in the Schedule subject to the approval of Authority, in its sole discretion, prior to satisfaction of all conditions set forth in this Section 3.4 of this Agreement if such Potential Claimant has: (i) fully performed all portions of the Work to be performed by such Potential Claimant; (ii) delivered to Contractor, or to Authority, all applicable operating manuals and assignments of warranties, and other documentation reasonably requested by Authority in connection with such Potential Claimant's work; and (iii) provided Authority unconditional releases for all amounts owed to the Potential Claimant.

Section 3.5 Assignment of Claims by Contractor.

In accordance with Section 7103.5 of the California Public Contract Code, Contractor and/or Subcontractor(s), if any, hereby assign to Authority all rights, title, and interest in and to all causes of action each may have under Section 4 of the Clayton Act (15 U.S.C. Section 15), as my be amended, or under the Cartwright Act (Chapter 2 (commencing with Section 16700) of Part 2 Division 7 of the California Business and Professions Code) as may be amended, arising from purchases of goods, services, or materials pursuant to this Agreement or the applicable subcontract. This assignment shall be made and become effective at the time Authority tenders final payment to Contractor (or final payment is tendered to the applicable Subcontractor), in accordance with this Agreement, without further acknowledgement, or action, by the Parties. Such assignment shall survive the expiration or termination of this Agreement.

DocuSign Envelope ID: FC20CC1D-27CE-4697-B47D-B02636483E86

Section 3.6 Information.

Contractor shall provide any information reasonably requested by Authority in connection with the performance of the Work, including (but not limited to) any information required by HUD.

ARTICLE 4
TERM; DEFAULT; REMEDIES

Section 4.1 Term.

The term of this Agreement shall extend from the Effective Date until the earlier of: (a) termination following an uncured default under this Agreement; or (b) Authority's written acceptance of the Work as completed through the issuance of an Acceptance Certificate; provided, however the indemnification and warranty provisions set forth in this Agreement and/or the General Conditions shall survive the expiration of the term.

Section 4.2 Events of Default by Contractor.

(a) Events of Default. Contractor shall be in default under this Agreement, if Contractor, after five (5) calendar days' notice and opportunity to cure:

(i) subject to Section 32(b) of the General Conditions, refuses or fails to prosecute the Work, or any separable part of it, with the diligence that will ensure its Substantial Completion within the Contract Time, or fails to complete the Work within this time;

(ii) is adjudged bankrupt or there is a general assignment for the benefit of creditors or the appointment of a receiver due to insolvency;

(iii) refuses or fails to supply sufficient skilled workers or materials;

(iv) repeatedly fails to make prompt payment to Subcontractors for materials or labor;

(v) repeatedly or materially disregards the applicable laws, local ordinances, or Authority instructions; or

(vi) is in substantial breach of any provision of this Agreement.

(b) Remedies. Following such default by Contractor, Authority shall have the right to pursue all of the remedies set forth in Section 4.3 of this Agreement; provided, however, in the event of default under Section 4.2(a)(i) of this Agreement, Authority shall enforce the remedy set forth in Section 4.3(d) of this Agreement, solely in connection with Contractor's failure to timely complete the Work.

DocuSign Envelope ID: FC20CC1D-27CE-4697-B47D-B02636483E86

Section 4.3 Remedies.

(a) Authority's Rights. The occurrence of any default by Contractor set forth in Section 4.2 of this Agreement, shall give Authority the right to take whatever action at law or in equity as may appear reasonably necessary to enforce performance or observance of any obligations, agreements, or covenants under this Agreement, including without limitation: (i) termination of this Agreement, (ii) without liability, taking possession of the Property and of all materials, equipment, tools, construction equipment and machinery thereon owned by Contractor; (iii) acceptance of assignment of subcontracts; and, (iv) completion of the Work by whatever reasonable method Authority may deem expedient.

(b) Surety. In the event of termination by Authority, Authority shall immediately serve written notice on the surety and Contractor. The surety shall have the right to take over and perform the Work if, within ten (10) calendar days after receiving the notice, it so notifies Authority, in writing, and promptly commences work (and thereafter, the surety shall be bound by all the terms and conditions of this Agreement).

(c) Payment. In the event of termination, Contractor shall not be entitled to receive any further payment until the Work is completed, and applicable lien periods have expired. If the unpaid balance of the Contract Sum exceeds the expense of completing the Work, plus compensation for additional managerial and administrative services and all other reasonable costs and expenses incurred by, or on behalf of Authority, the excess shall be paid to Contractor. If such expenses incurred by Authority exceed the unpaid balance, then, notwithstanding any other remedy invoked by, or otherwise available to, Authority, Contractor and surety (on a joint and several basis) shall be liable for the difference to Authority, and shall promptly pay such amount upon written demand by Authority. Such obligation shall survive the expiration or termination of this Agreement. In the event of any conflict between the terms of this Section 4.3(c) and any other provision of this Agreement, the terms of this Section 4.3(c) shall control.

(d) Liquidated Damages for Delay. By executing this Agreement, Contractor represents that it can, and will, complete the Work within the Contract Time. If Contractor fails to reach Substantial Completion by the date required by this Agreement, the Parties agree that Authority would suffer damages related to the delay, but that such damages would be extremely difficult and impracticable to ascertain. The Parties therefore agree that a reasonable estimate of the damages to be suffered by Authority in the event of such a delay is _____and ___/100ths Dollars ($_____.__) per calendar day. Contractor shall therefore pay to Authority that amount for each calendar day during which Substantial Completion is delayed beyond the date for Substantial Completion required by, and as set forth in, the Schedule. At Authority's discretion, Authority shall be entitled to deduct such amount from any payment otherwise due Contractor, and in no event shall such deduction constitute a breach of this Agreement by Authority. Any such amount not deducted shall be immediately payable by Contractor to Authority on Authority's written demand. Such payments are: (i) liquidated damages to Authority solely for Contractor's failure to timely complete the Work in accordance with this Agreement; (ii) in addition to any other remedy available to Authority for Contractor's other breach or default(s) under this Agreement; and (iii) not a penalty. Such liquidated damages are not in lieu of

DocuSign Envelope ID: FC20CC1D-27CE-4697-B47D-B02636483E86

Contractor's indemnity obligations set forth separately in this Agreement. This Section 4.3(d) replaces Section 33(a) of the General Conditions, in its entirety. For the avoidance of doubt, the Parties agree and acknowledge that Section 33(b) and Section 33(c) of the General Conditions remain in full force and effect, and are to be read in conjunction with Section 4.3(d).

Section 4.4 Remedies Cumulative.

No right, power, or remedy given to Authority by the terms of this Agreement is intended to be exclusive of any other right, power, or remedy; and each and every such right, power, or remedy shall be cumulative and in addition to every other right, power, or remedy given to Authority by the terms of any such instrument, or by any statute or otherwise against Contractor and any other person. Neither the failure nor any delay on the part of Authority to exercise any such rights and remedies shall operate as a waiver thereof, nor shall any single or partial exercise by Authority of any such right or remedy preclude any other or further exercise of such right or remedy, or any other right or remedy.

Section 4.5 Termination for Convenience.

Authority shall have the right to terminate this Agreement for convenience pursuant to Section 34 of the General Conditions.

ARTICLE 5
PARTIES' DISPUTES

Section 5.1 Definition of Claim Governed by Dispute Clause.

"Claim," as used in this clause, means a written demand or written assertion by one of the Parties seeking, as a matter of right, the payment of money in a sum certain, the adjustment or interpretation of terms of this Agreement, or other relief arising under or relating to this Agreement. A claim arising under this Agreement, unlike a claim relating to this Agreement, is a claim that can be resolved under this Agreement that provides for the relief sought by the claimant. A voucher, invoice, or other routine request for payment that is not in dispute when submitted is not a claim. The submission may be converted to a claim by complying with the requirements of this Article 5, if it is disputed either as to liability or amount or is not acted upon in a reasonable time.

Section 5.2 Applicability of Dispute Clause.

Except for disputes arising under applicable labor standards (i.e., Davis-Bacon and related acts), all disputes arising under or relating to this Agreement, including any claims for damages for the alleged breach thereof which are not disposed of by this Agreement, shall be resolved under this Article 5. This Article 5 supplements Section 31 of the General Conditions.

DocuSign Envelope ID: FC20CC1D-27CE-4697-B47D-B02636483E86

Section 5.3 Written Claims to be Submitted to Contracting Officer.

All claims by Contractor shall be made in writing and submitted to the Contracting Officer for a written decision.

Section 5.4 Notice of Decision or Decision Date.

The Contracting Officer shall, within fifteen (15) calendar days after receipt of the request, decide the claim or notify Contractor of the date by which the decision will be made. In no event shall the Contracting Officer render a decision later than sixty (60) calendar days from the receipt of the request.

Section 5.5 Effect of Contracting Officer's Decision.

The Contracting Officer's decision shall be final unless Contractor submits a demand for arbitration within the applicable statute of limitations, in accordance with Section 5.8 of this Agreement.

Section 5.6 Contractor's Duty to Perform Pending Claim Resolution.

Contractor shall proceed diligently with performance of this Agreement, pending final resolution of any request for relief, claim, appeal, or action arising under or relating to this Agreement, and comply with any decision of the Contracting Officer.

Section 5.7 Identification of Contracting Officer.

For purposes of this Agreement, Authority's Contracting Officer shall be Authority Executive Director or his or her designee (the "Contracting Officer").

Section 5.8 Arbitration of Disputes.

In the event Contractor disputes the Contracting Officer's determination, then the Parties shall submit the dispute to binding arbitration which, unless the Parties mutually agree otherwise, shall be in accordance with the Arbitration Rules and Procedures of JAMS (the "JAMS Rules") currently in effect, unless arbitration is not required pursuant to Section 5.9 of this Agreement, in which event Contractor shall proceed in accordance with Section 31 of the General Conditions. The demand for arbitration shall be filed in writing with Authority and with JAMS. The arbitration panel shall consist of a single arbitrator and the process for the arbitration shall proceed in accordance with the then current JAMS Rules. A demand for arbitration shall be made within thirty (30) calendar days following the Contracting Officer's determination, and in no event shall it be made after the date when institution of legal or equitable proceedings based on such claim would be barred by the applicable statute of limitations.

Section 5.9 Situations when Arbitration Not Applicable.

The foregoing agreement to arbitrate and other agreements to arbitrate with an additional person or entity duly consented to by Parties shall be specifically enforceable under applicable

DocuSign Envelope ID: FC20CC1D-27CE-4697-B47D-B02636483E86

law in any court having jurisdiction thereof. This Agreement to arbitrate shall not apply if: (a) any person or entity whom either Party believes is necessary or beneficial to the full resolution of the claim (including but not limited to Architect) cannot be joined in or bound by the arbitration proceeding; or (b) any person or entity whom either Party believes is necessary as a witness for such a proceeding is not available for such a proceeding; or (c) the amount in controversy exceeds Fifty Thousand and No/100ths Dollars ($50,000.00); or (d) if any change in the Contract Time or change in the date set forth for Substantial Completion could result from the arbitration.

Section 5.10 Judgment on Final Award.

The arbitrator shall make an award in writing that is consistent with the terms of this Agreement (including but not limited to the terms governing payment of attorneys' fees) and the laws of the state of California, and that includes findings of fact and a reasoned decision. The award rendered by the arbitrator shall be final, and judgment may be entered upon it in accordance with applicable law in any court having jurisdiction thereof.

Section 5.11 Notice of Third-Party Claims.

In accordance with Section 9201(b) of the California Public Contract Code, Authority shall provide Contractor timely notification of any third-party claim related to this Agreement (if any).

ARTICLE 6
FEDERAL REQUIREMENTS

Section 6.1 Certain Requirements.

(a) Compliance with Laws. Contractor shall comply with all applicable state and federal laws, rules and regulations, including but not limited to the requirements of the following, as the same may be amended from time to time:

(i) The requirements of Executive Order 11246, as more particularly set forth in Exhibit J;

(ii) The Fair Housing Act, 42 U.S.C. 3601 et seq., and regulations issued thereunder, 24 CFR Part 100; Executive Order 11063 (Equal Opportunity in Housing) and regulations issued thereunder, 24 CFR Part 107; the fair housing poster regulations, 24 CFR Part 110, and the HUD Fair Housing Act Advertising Guidelines;

(iii) Title VI of the Civil Rights Act of 1964, 42 U.S.C. 2000d, and regulations issued thereunder relating to nondiscrimination in housing, 24 CFR Part 1;

(iv) Age Discrimination Act of 1975, 42 U.S.C. 6101-07, and regulations issued thereunder, 24 CFR Part 146;

DocuSign Envelope ID: FC20CC1D-27CE-4697-B47D-B02636483E86

(v) Section 504 of the Rehabilitation Act of 1973, 29 U.S.C. 794, and regulations issued thereunder, 24 CFR Part 8; the Americans with Disabilities Act, 42 U.S.C. 12181-12189, and regulations issued thereunder, 28 CFR Part 36; and

(vi) The Lead-Based Paint Poisoning Prevention Act, as amended (42 U.S.C. 4801-4846.), the Residential Lead-Based Paint Hazard Reduction Act (42 U.S.C. 4851 et seq.), and implementing regulations at 24 C.F.R. Part 35.

(b) No Limitation. Contractor is required to comply with all applicable laws regarding the Work, and the failure to include, or otherwise specify, any applicable law in this Section 6.1, or elsewhere in this Agreement, shall not be construed to waive, limit, or otherwise impair Contractor's obligation to comply with such laws.

Section 6.2 Recordkeeping, Audit & Reporting Requirements

(a) Recordkeeping; Access. Contractor's books and records pertaining to its performance under this Agreement shall be kept in accordance with generally accepted accounting principles, and shall be retained for at least three (3) years after Authority makes final payment to Contractor under this Agreement and all other pending matters are closed. Contractor agrees to grant a right of access to Authority, HUD, any agency providing funds to Authority, the Comptroller General of the United States, and any of their authorized representatives, with respect to any books, documents, papers, or other records pertinent to this Agreement in order to make audits, examinations, excerpts, and transcripts. Authority shall notify Contractor of any records it deems insufficient. Contractor shall have fifteen (15) calendar days after the receipt of such a notice to correct any deficiency in the records specified by Authority in such notice, or if a period longer than fifteen (15) calendar days is reasonably necessary to correct the deficiency, then Contractor shall begin to correct the deficiency within fifteen (15) calendar days and correct the deficiency as soon as reasonably possible.

(b) Contractors. Contractor agrees to include in first-tier subcontracts under this Agreement a clause substantially the same as Section 6.2(a) of this Agreement. The term "subcontract" as used in this clause excludes contracts and purchase orders not exceeding Ten Thousand and No/100ths Dollars ($10,000.00).

(c) Access for Disputed Matters. The period of access and examination under Section 6(a) and Section 6(b) of this Agreement for records relating to: (i) appeals under the Dispute Section of this Agreement; (ii) litigation or settlements of disputes arising from the performance of this Agreement; or (iii) costs and expenses of this Agreement to which Authority, HUD or Comptroller General or any of their duly authorized representatives has taken exception shall continue until disposition of such appeals, litigation, claims, or exceptions.

(d) Audit. Authority, HUD, any agency providing funds to Authority, the Comptroller General of the United States, or any of their duly authorized representatives, shall have the right to perform any audit of Contractor's finances and records related to its performance under this Agreement, including without limitation, the financial arrangement with anyone Contractor may delegate to discharge any part of its obligations under this Agreement.

DocuSign Envelope ID: FC20CC1D-27CE-4697-B47D-B02636483E86

Section 6.3 Interest of Members of Congress.

No Member of or delegate to the Congress of the United States shall be admitted to any share or part of this Agreement or to any benefit to arise therefrom.

Section 6.4 Interest of Member, Officer, or Employee and Former Member, Officer, or Employee of Authority.

No member, officer, or employee of Authority, no member of the governing body of the locality in which the project is situated, no member of the governing body by which Authority was activated, and no other public official of such locality or localities who exercises any functions or responsibilities with respect to the project, shall, during his or her tenure, or for one (1) year thereafter or such longer time as Authority's Code of Ethics may require, have any interest, direct or indirect, in this Agreement or the proceeds thereof, unless the conflict of interest is waived by Authority and by HUD.

Section 6.5 Lobbying Activities.

Contractor shall comply with 31 USC 1352 which prohibits the use of Federal appropriated funds to pay any person for influencing or attempting to influence an officer or employee of any agency, a Member of Congress, an officer or employee of Congress, or an employee of a member of Congress in connection with any of the following covered Federal actions: the awarding of any Federal contract; the making of any Federal grant; the making of any Federal loan; the entering into of any cooperative agreement; or the modification of any Federal contract, loan, or cooperative agreement. Contractor further agrees to comply with the requirement of such legislation to furnish a disclosure (OMB Standard Form LLL) if any funds other than Federal appropriated funds (including profit or fee received under a covered Federal transaction) have been paid or will be paid to any person for influencing or attempting to influence an officer or employee of any agency, a Member of Congress, an officer or employee of Congress, or an employee of a Member of Congress, in connection with a Federal contract, grant, loan, or cooperative agreement, which payment would be prohibited if made from Federal appropriated funds.

ARTICLE 7
GENERAL PROVISIONS

Section 7.1 Relationship of Parties.

Nothing contained in this Agreement shall be interpreted or understood by any of the Parties, or by any third persons, as creating the relationship of employer and employee, principal and agent, limited or general partnership, or joint venture between Authority and Contractor or its agents, employees or subcontractors, and Contractor shall at all times be deemed an independent contractor and shall be wholly responsible for the manner in which it or its agents, or both, perform the services required of it by the terms of this Agreement. Contractor has and retains the right to exercise full control of employment, direction, compensation, and discharge

DocuSign Envelope ID: FC20CC1D-27CE-4697-B47D-B02636483E86

of all persons assisting in the performance of services under this Agreement. In regards to the performance of the Work, Contractor shall be solely responsible for all matters relating to payment of its employees, including compliance with Social Security, withholding, and all other laws and regulations governing such matters, and shall include requirements in each contract that subcontractors shall be solely responsible for similar matters relating to their employees. Contractor shall be solely responsible for its own acts and those of its agents and employees. Contractor is not authorized to act on behalf of Authority with respect to any matters except those specifically set forth in this Agreement. Authority shall not have any liability or duty to any person, firm, corporation, or governmental body for any act of omission or commission, liability, or obligation of Contractor, whether arising from actions under this Agreement or otherwise. Authority agrees to exercise all reasonable efforts to enable Contractor to perform the Work in the best way and most expeditious manner by furnishing and approving, in a timely manner, information required by Contractor and making payments to Contractor in accordance with the requirements of the Contract Documents.

Section 7.2 No Claims.

Nothing contained in this Agreement shall create or justify any claim against Authority by any person that Contractor may have employed or with whom Contractor may have contracted relative to the purchase of materials, supplies or equipment, or the furnishing or the performance of any work or services with respect to the performance of the Work, and Contractor shall include similar requirements in any contracts entered into for the performance of the Work.

Section 7.3 Amendments.

No alteration or variation of the terms of this Agreement shall be valid unless made in writing by the Parties.

Section 7.4 Indemnification.

(a) Contractor's Obligation. To the fullest extent permitted by law, Contractor shall indemnify and hold harmless Authority, and its commissioners, Architect, their consultants, and agents and employees or any of them from and against claims, damages, losses and expenses, including but not limited to attorneys' fees, arising out of or resulting from performance of the Work, provided that such claim, damage, loss or expense is attributable to bodily injury, sickness, disease or death, or to injury to or destruction of tangible property, but only to the extent caused by the negligent acts or omissions of Contractor, a Subcontractor, anyone directly or indirectly employed by them or anyone for whose acts they may be liable, regardless of whether or not such claim, damage, loss or expense is caused in part by a Party indemnified hereunder. Such obligation shall not be construed to negate, abridge, or reduce other rights or obligations of indemnity which would otherwise exist as to a Party or person described in this Section 7.4.

DocuSign Envelope ID: FC20CC1D-27CE-4697-B47D-B02636483E86

(b) No Limitation. In claims against any person or entity indemnified under this Section 7.4 by an employee of Contractor, a Subcontractor, anyone directly or indirectly employed by them or anyone for whose acts they may be liable, the indemnification obligation under this Section 7.4 shall not be limited by a limitation on amount or type of damages, compensation or benefits payable by or for Contractor or a Subcontractor under workers' compensation acts, disability benefit acts or other employee benefit acts.

(c) Survival. The provisions of this Section 7.4 shall survive the termination or expiration of this Agreement.

Section 7.5 Non-Liability of Authority Officials, Employees and Agents.

No member, official, employee or agent of Authority shall be personally liable to Contractor in the event of any default or breach by Authority or for any amount which may become due to Contractor or its successor or on any obligation under the terms of this Agreement.

Section 7.6 No Third Party Beneficiaries.

There shall be no third party beneficiaries to this Agreement.

Section 7.7 Conflict of Interest.

Contractor covenants that neither it nor any of its directors, officers, partners or employees has any interest, nor shall acquire any interest, directly or indirectly, which would conflict in any manner or degree with the performance of the services hereunder. Contractor further covenants that in the performance of this Agreement, no person having such interest shall be employed by it.

Section 7.8 Representatives; Authorization.

(a) Representation. To facilitate communication, the Parties to this Agreement shall designate a representative with responsibility for the routine administration of each Party's obligations under this Agreement. The Parties initially appoint the following as representatives:

Authority: Joseph Nagel
Construction Project Manager
Housing Authority of the City of Alameda
701 Atlantic Avenue
Alameda, California 94501
Tele: (510) 747-4340
Email: jnagel@alamedahsg.org

DocuSign Envelope ID: FC20CC1D-27CE-4697-B47D-B02636483E86

Contractor: _____
_____
_____, Ca. 9_____
Tele:_____
Email: _____@_____
Attn: _____

(b) Authorization. Except as may be otherwise specifically provided herein, whenever any approval, notice, direction, consent, request, or other action by Authority is required or permitted under this Agreement, such action may be given, made, or taken by Authority's Executive Director and/or his designee, without further action or approval by Authority Board of Commissioners, and any such action shall be in writing. The Executive Director and/or his designee may, in his or her discretion, agree in writing to modification of the dates by which action are to be complete or to waive any terms and conditions of this Agreement. The Executive Director and/or his designee is authorized to execute all ancillary documents necessary to effectuate the intent of this Agreement, and to negotiate and execute amendments to this Agreement substantially in conformance with the intent of this Agreement.

Section 7.9 Notices, Demands and Communications.

Formal notices, demands, approvals, claims, and communications between the Parties shall be in writing and shall be sufficiently given if and shall not be deemed given unless dispatched by registered or certified mail, postage prepaid, return receipt requested, or delivered by express delivery service, return receipt requested, or delivered personally, to the principal office of the Parties as follows:

Authority: Housing Authority of the City of Alameda
701 Atlantic Avenue
Alameda, California 94501
Attention: Vanessa Cooper, Executive Director

Contractor: _____
_____
_____

Such written notices, demands and communications may be sent in the same manner to such other addresses as the affected Party may from time to time designate by mail as provided in this Section 7.9. Receipt shall be deemed to have occurred on the date shown on a written receipt as the date of delivery or refusal of delivery (or attempted delivery if undeliverable).

Section 7.10 Applicable Law.

This Agreement shall be governed by California law.

DocuSign Envelope ID: FC20CC1D-27CE-4697-B47D-B02636483E86

Section 7.11 Parties Bound.

Other than in connection with the portions of the Work to be performed by Subcontractors, Contractor shall not assign or otherwise transfer this Agreement, as a whole, or in any part, without the prior written consent of Authority. Any such attempted assignment or transfer shall be null and void, and shall constitute a default under this Agreement. Except as otherwise limited herein, the provisions of this Agreement shall be binding upon and inure to the benefit of the Parties and their heirs, executors, administrators, legal representatives, successors, and assigns.

Section 7.12 Attorneys' Fees.

If any lawsuit is commenced to enforce any of the terms of this Agreement, the prevailing Party will have the right to recover its reasonable attorneys' fees and costs of suit from the other Party.

Section 7.13 Severability.

If any term of this Agreement is held by a court of competent jurisdiction to be invalid, void or unenforceable, the remainder of the provisions shall continue in full force and effect unless the rights and obligations of the Parties have been materially altered or abridged by such invalidation, voiding or unenforceability.

Section 7.14 Waivers.

Any waiver by Authority of any obligation or condition in this Agreement must be in writing. No waiver will be implied from any delay or failure by Authority to take action on any breach or default of Contractor or to pursue any remedy allowed under this Agreement or applicable law. Any extension of time granted to Contractor to perform any obligation under this Agreement shall not operate as a waiver or release from any of its obligations under this Agreement. Consent by Authority to any act or omission by Contractor shall not be construed to be a consent to any other or subsequent act or omission or to waive the requirement for Authority's written consent to future waivers.

Section 7.15 Title of Parts and Sections.

Any titles of the sections or subsections of this Agreement are inserted for convenience of reference only and shall be disregarded in interpreting any part of the provisions of this Agreement.

Section 7.16 Entire Understanding of the Parties.

This Agreement and the attached exhibits constitute the entire understanding and agreement of the Parties with respect to the matters set forth in this Agreement. This Agreement shall not be construed as if it had been prepared by one of the Parties, but rather as if both Parties had prepared it. The Parties have read and reviewed this Agreement and agree that any rule of construction to the effect that ambiguities are to be resolved against the drafting party (including

DocuSign Envelope ID: FC20CC1D-27CE-4697-B47D-B02636483E86

but not limited to Section 1654 of the California Civil Code as may be amended from time to time, or any other state law, or common law principle) shall not apply to the interpretation of this Agreement.

Section 7.17 Builder's Risk Insurance.

Authority shall purchase and maintain a Builder's Risk Insurance policy, and shall include the interests of Authority, Contractor, and Subcontractors. All deductible amounts will be the responsibility of Authority. Notwithstanding any provision of this Agreement to the contrary, including but not limited to Section 33 of the General Conditions, pursuant to Section 7105 of the California Public Contract Code, Contractor shall not assume responsibility for repairing or restoring damages caused by an "act of God" in excess of five percent (5.00%) of the Contract Sum; provided, that the Work damaged was performed by Contractor, or its Subcontractors (as applicable) in accordance with accepted and applicable building standards and this Agreement.

Section 7.18 Contractor Notifications.

(a) Notifications. Contractor shall notify Authority promptly, in writing, of any and all of the following:

(i) Any litigation or claim of any kind affecting or relating to Contractor or its subsidiaries or any Material Subcontractor where the amount claimed is or maybe One Hundred Thousand and No/100ths Dollars ($100,000.00) or more whether covered by insurance or not;

(ii) Any termination of a construction contract to which Contractor is a party;

(iii) Any default or potential default of a Material Subcontractor or material supplier (including without limitation, its inability to maintain its schedule);

(iv) Any material adverse change in Contractor's or any Material Subcontractor's financial condition, any material adverse change in Contractor's or any Material Subcontractor's operations, or any change in the management of Contractor or any Material Subcontractors; or

(v) Any other circumstance, event, or occurrence that results in a material adverse change in Contractor's or any Material Subcontractor's ability to timely perform any of its obligations under any of the Contract Documents.

(b) Material Subcontractor. For the purposes of this Section 7.18(b), "Material Subcontractor" means a Subcontractor performing more than Twenty-Five Thousand and No/100ths Dollars ($25,000.00) of the Work.

DocuSign Envelope ID: FC20CC1D-27CE-4697-B47D-B02636483E86

Section 7.19 Time.

Time is of the essence in the performance of the Work.

Section 7.20 Conflict Among Contract Documents.

In the event of any conflict between the terms of this Agreement and the other Contract Documents, the terms of this Agreement shall control. In the event of any conflict between the terms of this Agreement and the Exhibits, unless otherwise noted, the terms of this Agreement shall control.

Section 7.21 Multiple Originals; Counterpart.

This Agreement may be executed in multiple originals, each of which is deemed to be an original, and may be signed in counterparts.

[**SIGNATURE PAGE FOLLOWS**]

DocuSign Envelope ID: FC20CC1D-27CE-4697-B47D-B02636483E86

IN WITNESS WHEREOF, the Parties have duly executed this Agreement by their duly authorized officers and shall become effective as of the Effective Date, it being the intent of the Parties that Authority be the last of the Parties to sign this Agreement.

AUTHORITY:

HOUSING AUTHORITY OF THE CITY OF ALAMEDA,
a public body, corporate and politic

By: _____

Name: _____

Its: _____

CONTRACTOR:

_____,
a _____

By: _____

Name: _____

Its: _____

DocuSign Envelope ID: FC20CC1D-27CE-4697-B47D-B02636483E86

EXHIBIT A

SCOPE OF WORK

[See Attached]

REMAINDER OF THIS PAGE LEFT INTENTIONALLY BLANK

DocuSign Envelope ID: FC20CC1D-27CE-4697-B47D-B02636483E86

EXHIBIT B

LIST OF SUBCONTRACTORS

[See Attached]

REMAINDER OF THIS PAGE LEFT INTENTIONALLY BLAN

DocuSign Envelope ID: FC20CC1D-27CE-4697-B47D-B02636483E86

EXHIBIT C

CONTRACTOR SCHEDULE OF VALUES, QUALIFICATIONS AND EXCLUSIONS

[See Attached]

REMAINDER OF THIS PAGE LEFT INTENTIONALLY BLANK

DocuSign Envelope ID: FC20CC1D-27CE-4697-B47D-B02636483E86

EXHIBIT D

LIST OF PLANS

[See Attached]

REMAINDER OF THIS PAGE LEFT INTENTIONALLY BLANK

DocuSign Envelope ID: FC20CC1D-27CE-4697-B47D-B02636483E86

EXHIBIT E

GENERAL CONDITIONS FOR CONSTRUCTION CONTRACT (FORM HUD-5370)

[See Attached]

REMAINDER OF THIS PAGE LEFT INTENTIONALLY BLANK

DocuSign Envelope ID: FC20CC1D-27CE-4697-B47D-B02636483E86

General Conditions for Construction Contracts - Public Housing Programs

U.S. Department of Housing and Urban Development
Office of Public and Indian Housing
OMB Approval No. 2577-0157 (exp. 11/30/2023)

Applicability. This form is applicable to any construction/development contract greater than $250,000.

Public reporting burden for this collection of information is estimated to average 1 hour. This includes the time for collecting, reviewing, and reporting the data. The information requested is required to obtain a benefit. This form includes those clauses required by OMB's common rule on grantee procurement, implemented at HUD in 2 CFR 200, and those requirements set forth in Section 3 of the Housing and Urban Development Act of 1968 and its amendment by the Housing and Community Development Act of 1992, implemented by HUD at 24 CFR Part 75. The form is required for construction contracts awarded by Public Housing Agencies (PHAs). The form is used by Housing Authorities in solicitations to provide necessary contract clauses. If the form were not used, PHAs would be unable to enforce their contracts. There are no assurances of confidentiality. HUD may not conduct or sponsor, and an applicant is not required to respond to a collection of information unless it displays a currently valid OMB control number.

	Clause	Page		Clause	Page
1.	Definitions	2		**Administrative Requirements**	
2.	Contractor's Responsibility for Work	2	25.	Contract Period	9
3.	Architect's Duties, Responsibilities and Authority	2	26.	Order of Precedence	9
4.	Other Contracts	3	27.	Payments	9
	Construction Requirements		28.	Contract Modifications	10
5.	Preconstruction Conference and Notice to Proceed	3	29.	Changes	10
6.	Construction Progress Schedule	3	30.	Suspension of Work	11
7.	Site Investigation and Conditions Affecting the Work	3	31.	Disputes	11
8.	Differing Site Conditions	4	32.	Default	11
9.	Specifications and Drawings for Construction	4	33.	Liquidated	12
10.	As-Built Drawings	5	34.	Termination of Convenience	12
11.	Material and Workmanship	5	35.	Assignment of Contract	12
12.	Permits and Codes	5	36.	Insurance	12
13.	Health, Safety, and Accident Prevention	6	37.	Subcontracts	13
14.	Temporary Buildings and Transportation Materials	6	38.	Subcontracting with Small and Minority Firms, Women's Business Enterprise, and Labor Surplus Area Firms	13
15.	Availability and Use of Utility Services	6	39.	Equal Employment Opportunity	13
16.	Protection of Existing Vegetation, Structures, Equipment, Utilities, and Improvements	6	40.	Employment, Training, and Contracting Opportunities for Low-Income Persons, Section 3 of the Housing and Urban Development Act of 1968	14
17.	Temporary Buildings and Transportation Materials	7	41.	Interest of Members of Congress	15
18.	Clean Air and Water	7	42.	Interest of Members, Officers, or Employees and Former Members, Officers, or Employees	15
19.	Energy Efficiency	7	43.	Limitations on Payments Made to Influence	15
20.	Inspection and Acceptance of Construction	7	44.	Royalties and Patents	15
21.	Use and Possession Prior to	8	45.	Examination and Retention of Contractor's Records	15
22.	Warranty of Title	8	46.	Labor Standards-Davis-Bacon and Related Acts	15
23.	Warranty of	8	47.	Non-Federal Prevailing Wage Rates	19
24.	Prohibition Against Liens	9	48.	Procurement of Recovered Materials	19

1. Definitions

(a) "Architect" means the person or other entity engaged by the PHA to perform architectural, engineering, design, and other services related to the work as provided for in the contract. When a PHA uses an engineer to act in this capacity, the terms "architect" and "engineer" shall be synonymous. The Architect shall serve as a technical representative of the Contracting Officer. The Architect's authority is as set forth elsewhere in this contract.

(b) "Contract" means the contract entered into between the PHA and the Contractor. It includes the forms of Bid, the Bid Bond, the Performance and Payment Bond or Bonds or other assurance of completion, the Certifications, Representations, and Other Statements of Bidders (form HUD-5370), these General Conditions of the Contract for Construction (form HUD-5370), the applicable wage rate determinations from the U.S. Department of Labor, any special conditions included elsewhere in the contract, the specifications, and drawings. It includes all formal changes to any of those documents by addendum, change order, or other modification.

(c) "Contracting Officer" means the person delegated the authority by the PHA to enter into, administer, and/or terminate this contract and designated as such in writing to the Contractor. The term includes any successor Contracting Officer and any duly authorized representative of the Contracting Officer also designated in writing. The Contracting Officer shall be deemed the authorized agent of the PHA in all dealings with the Contractor.

(d) "Contractor" means the person or other entity entering into the contract with the PHA to perform all of the work required under the contract.

(e) "Drawings" means the drawings enumerated in the schedule of drawings contained in the Specifications and as described in the contract clause entitled Specifications and Drawings for Construction herein.

(f) "HUD" means the United States of America acting through the Department of Housing and Urban Development including the Secretary, or any other person designated to act on its behalf. HUD has agreed, subject to the provisions of an Annual Contributions Terms and Conditions (ACC), to provide financial assistance to the PHA, which includes assistance in financing the work to be performed under this contract. As defined elsewhere in these General Conditions or the contract documents, the determination of HUD may be required to authorize changes in the work or for release of funds to the PHA for payment to the Contractor. Notwithstanding HUD's role, nothing in this contract shall be construed to create any contractual relationship between the Contractor and HUD.

(g) "Project" means the entire project, whether construction or rehabilitation, the work for which is provided for in whole or in part under this contract.

(h) "PHA" means the Public Housing Agency organized under applicable state laws which is a party to this contract.

(j) "Specifications" means the written description of the technical requirements for construction and includes the criteria and tests for determining whether the requirements are met.

(l) "Work" means materials, workmanship, and manufacture and fabrication of components.

2. Contractor's Responsibility for Work

(a) The Contractor shall furnish all necessary labor, materials, tools, equipment, and transportation necessary for performance of the work. The Contractor shall also furnish all necessary water, heat, light, and power not made available to the Contractor by the PHA pursuant to the clause entitled Availability and Use of Utility Services herein.

(b) The Contractor shall perform on the site, and with its own organization, work equivalent to at least [ ] (12 percent unless otherwise indicated) of the total amount of work to be performed under the order. This percentage may be reduced by a supplemental agreement to this order if, during performing the work, the Contractor requests a reduction and the Contracting Officer determines that the reduction would be to the advantage of the PHA.

(c) At all times during performance of this contract and until the work is completed and accepted, the Contractor shall directly superintend the work or assign and have on the work site a competent superintendent who is satisfactory to the Contracting Officer and has authority to act for the Contractor.

(d) The Contractor shall be responsible for all damages to persons or property that occur as a result of the Contractor's fault or negligence, and shall take proper safety and health precautions to protect the work, the workers, the public, and the property of others. The Contractor shall hold and save the PHA, its officers and agents, free and harmless from liability of any nature occasioned by the Contractor's performance. The Contractor shall also be responsible for all materials delivered and work performed until completion and acceptance of the entire work, except for any completed unit of work which may have been accepted under the contract.

(e) The Contractor shall lay out the work from base lines and bench marks indicated on the drawings and be responsible for all lines, levels, and measurements of all work executed under the contract. The Contractor shall verify the figures before laying out the work and will be held responsible for any error resulting from its failure to do so.

(f) The Contractor shall confine all operations (including storage of materials) on PHA premises to areas authorized or approved by the Contracting Officer.

(g) The Contractor shall at all times keep the work area, including storage areas, free from accumulations of waste materials. After completing the work and before final inspection, the Contractor shall (1) remove from the premises all scaffolding, equipment, tools, and materials (including rejected materials) that are not the property of the PHA and all rubbish caused by its work; (2) leave the work area in a clean, neat, and orderly condition satisfactory to the Contracting Officer; (3) perform all specified tests; and, (4) deliver the installation in complete and operating condition.

(h) The Contractor's responsibility will terminate when all work has been completed, the final inspection made, and the work accepted by the Contracting Officer. The Contractor will then be released from further obligation except as required by the warranties specified elsewhere in the contract.

3. Architect's Duties, Responsibilities, and Authority

(a) The Architect for this contract, and any successor, shall be designated in writing by the Contracting Officer.

(b) The Architect shall serve as the Contracting Officer's technical representative with respect to architectural, **Schedule** engineering, and design matters related to the work performed under the contract. The Architect may provide direction on contract performance. Such direction shall be within the scope of the contract and may not be of a nature which: (1) institutes additional work outside the scope of the contract; (2) constitutes a change as defined in the Changes clause herein; (3) causes an increase or decrease in the cost of the contract; (4) alters the Construction Progress Schedule; or (5) changes any of the other express terms or conditions of the contract.

(c) The Architect's duties and responsibilities may include but shall not be limited to:

(1) Making periodic visits to the work site, and on the basis of his/her on-site inspections, issuing written reports to the PHA which shall include all observed deficiencies. The Architect shall file a copy of the report with the Contractor's designated representative at the site;

(2) Making modifications in drawings and technical specifications and assisting the Contracting Officer in the preparation of change orders and other contract modifications for issuance by the Contracting Officer;

(3) Reviewing and making recommendations with respect to - (i) the Contractor's construction progress schedules; (ii) the Contractor's shop and detailed drawings; (iii) the machinery, mechanical and other equipment and materials or other articles proposed for use by the Contractor; and, (iv) the Contractor's price breakdown and progress payment estimates; and,

(4) Assisting in inspections, signing Certificates of Completion, and making recommendations with respect to acceptance of work completed under the contract.

4. Other Contracts

The PHA may undertake or award other contracts for additional work at or near the site of the work under this contract. The Contractor shall fully cooperate with the other contractors and with PHA employees and shall carefully adapt scheduling and performing the work under this contract to accommodate the additional work, heeding any direction that may be provided by the Contracting Officer. The Contractor shall not commit or permit any act that will interfere with the performance of work by any other contractor or by PHA employees

Construction Requirements

5. Pre-construction Conference and Notice to Proceed

(a) Within ten calendar days of contract execution, and prior to the commencement of work, the Contractor shall attend a preconstruction conference with representatives of the PHA, its Architect, and other interested parties convened by the PHA. The conference will serve to acquaint the participants with the general plan of the construction operation and all other requirements of the contract. The PHA will provide the Contractor with the date, time, and place of the conference.

(b) The contractor shall begin work upon receipt of a written Notice to Proceed from the Contracting Officer or designee. The Contractor shall not begin work prior to receiving such notice.

6. Construction Progress

(a) The Contractor shall, within five days after the work commences on the contract or another period of time determined by the Contracting Officer, prepare and submit to the Contracting Officer for approval three copies of a practicable schedule showing the order in which the Contractor proposes to perform the work, and the dates on which the Contractor contemplates starting and completing the several salient features of the work (including acquiring labor, materials, and equipment). The schedule shall be in the form of a progress chart of suitable scale to indicate appropriately the percentage of work scheduled for completion by any given date during the period. If the Contractor fails to submit a schedule within the time prescribed, the Contracting Officer may withhold approval of progress payments or take other remedies under the contract until the Contractor submits the required schedule.

(b) The Contractor shall enter the actual progress on the chart as required by the Contracting Officer, and immediately deliver three copies of the annotated schedule to the Contracting Officer. If the Contracting Officer determines, upon the basis of inspection conducted pursuant to the clause entitled Inspection and Acceptance of Construction, herein that the Contractor is not meeting the approved schedule, the Contractor shall take steps necessary to improve its progress, including those that may be required by the Contracting Officer, without additional cost to the PHA. In this circumstance, the Contracting Officer may require the Contractor to increase the number of shifts, overtime operations, days of work, and/or the amount of construction plant, and to submit for approval any supplementary schedule or schedules in chart form as the Contracting Officer deems necessary to demonstrate how the approved rate of progress will be regained.

(c) Failure of the Contractor to comply with the requirements of the Contracting Officer under this clause shall be grounds for a determination by the Contracting Officer that the Contractor is not prosecuting the work with sufficient diligence to ensure completion within the time specified in the Contract. Upon making this determination, the Contracting Officer may terminate the Contractor's right to proceed with the work, or any separable part of it, in accordance with the Default clause of this contract.

7. Site Investigation and Conditions Affecting the Work

(a) The Contractor acknowledges that it has taken steps reasonably necessary to ascertain the nature and location of the work, and that it has investigated and satisfied itself as to the general and local conditions which can affect the work or its cost, including but not limited to, (1) conditions bearing upon transportation, disposal, handling, and storage of materials; (2) the availability of labor, water, electric power, and roads;(3) uncertainties of weather, river stages, tides, or similar physical conditions at the site; (4) the conformation and conditions of the ground; and (5) the character of equipment and facilities needed preliminary to and during work performance. The Contractor also acknowledges that it has satisfied itself as to the character, quality, and quantity of surface and subsurface materials or obstacles to be encountered insofar as this information is

reasonably ascertainable from an inspection of the site, including all exploratory work done by the PHA, as well as from the drawings and specifications made a part of this contract. Any failure of the Contractor to take the actions described and acknowledged in this paragraph will not relieve the Contractor from responsibility for estimating properly the difficulty and cost of successfully performing the work, or for proceeding to successfully perform the work without additional expense to the PHA.

(b) The PHA assumes no responsibility for any conclusions or interpretations made by the Contractor based on the information made available by the PHA. Nor does the PHA assume responsibility for any understanding reached or representation made concerning conditions which can affect the work by any of its officers or agents before the execution of this contract, unless that understanding or representation is expressly stated in this contract.

8. Differing Site Conditions

(a) The Contractor shall promptly, and before the conditions are disturbed, give a written notice to the Contracting Officer of (1) subsurface or latent physical conditions at the site which differ materially from those indicated in this contract, or (2) unknown physical conditions at the site(s), of an unusual nature, which differ materially from those ordinarily encountered and generally recognized as inhering in work of the character provided for in the contract.

(b) The Contracting Officer shall investigate the site conditions promptly after receiving the notice. Work shall not proceed at the affected site, except at the Contractor's risk, until the Contracting Officer has provided written instructions to the Contractor. If the conditions do materially so differ and cause an increase or decrease in the Contractor's cost of, or the time required for, performing any part of the work under this contract, whether or not changed as a result of the conditions, the Contractor shall file a claim in writing to the PHA within ten days after receipt of such instructions and, in any event, before proceeding with the work. An equitable adjustment in the contract price, the delivery schedule, or both shall be made under this clause and the contract modified in writing accordingly.

(c) No request by the Contractor for an equitable adjustment to the contract under this clause shall be allowed, unless the Contractor has given the written notice required; provided, that the time prescribed in (a) above for giving written notice may be extended by the Contracting Officer.

(d) No request by the Contractor for an equitable adjustment to the contract for differing site conditions shall be allowed if made after final payment under this contract.

9. Specifications and Drawings for Construction

(a) The Contractor shall keep on the work site a copy of the drawings and specifications and shall at all times give the Contracting Officer access thereto. Anything mentioned in the specifications and not shown on the drawings, or shown on the drawings and not mentioned in the specifications, shall be of like effect as if shown or mentioned in both. In case of difference between drawings and specifications, the specifications shall govern. In case of discrepancy in the figures, in the drawings, or in the specifications, the matter shall be promptly submitted to the Contracting Officer, who shall promptly make a determination in writing. Any adjustment by the Contractor without such a determination shall be at its own risk and expense. The Contracting Officer shall furnish from time to time such detailed drawings and other information as considered necessary, unless otherwise provided.

(b) Wherever in the specifications or upon the drawings the words "directed", "required", "ordered", "designated", "prescribed", or words of like import are used, it shall be understood that the "direction", "requirement", "order", "designation", or "prescription", of the Contracting Officer is intended and similarly the words "approved", "acceptable", "satisfactory", or words of like import shall mean "approved by", or "acceptable to", or "satisfactory to" the Contracting Officer, unless otherwise expressly stated.

(c) Where "as shown" "as indicated", "as detailed", or words of similar import are used, it shall be understood that the reference is made to the drawings accompanying this contract unless stated otherwise. The word "provided" as used herein shall be understood to mean "provide complete in place" that is "furnished and installed".

(d) "Shop drawings" means drawings, submitted to the PHA by the Contractor, subcontractor, or any lower tier subcontractor, showing in detail (1) the proposed fabrication and assembly of structural elements and (2) the installation (i.e., form, fit, and attachment details) of materials of equipment. It includes drawings, diagrams, layouts, schematics, descriptive literature, illustrations, schedules, performance and test data, and similar materials furnished by the Contractor to explain in detail specific portions of the work required by the contract. The PHA may duplicate, use, and disclose in any manner and for any purpose shop drawings delivered under this contract.

(e) If this contract requires shop drawings, the Contractor shall coordinate all such drawings, and review them for accuracy, completeness, and compliance with other contract requirements and shall indicate its approval thereon as evidence of such coordination and review. Shop drawings submitted to the Contracting Officer without evidence of the Contractor's approval may be returned for resubmission. The Contracting Officer will indicate an approval or disapproval of the shop drawings and if not approved as submitted shall indicate the PHA's reasons therefore. Any work done before such approval shall be at the Contractor's risk. Approval by the Contracting Officer shall not relieve the Contractor from responsibility for any errors or omissions in such drawings, nor from responsibility for complying with the requirements of this contract, except with respect to variations described and approved in accordance with (f) below.

(f) If shop drawings show variations from the contract requirements, the Contractor shall describe such variations in writing, separate from the drawings, at the time of submission. If the Architect approves any such variation and the Contracting Officer concurs, the Contracting Officer shall issue an appropriate modification to the contract, except that, if the variation is minor or does not involve a change in price or in time of performance, a modification need not be issued.

(g) It shall be the responsibility of the Contractor to make timely requests of the PHA for such large scale and full size drawings, color schemes, and other additional information, not already in his possession, which shall be

required in the planning and production of the work. Such requests may be submitted as the need arises, but each such request shall be filed in ample time to permit appropriate action to be taken by all parties involved so as to avoid delay.

(h) The Contractor shall submit to the Contracting Officer for approval four copies (unless otherwise indicated) of all shop drawings as called for under the various headings of these specifications. Three sets (unless otherwise indicated) of all shop drawings, will be retained by the PHA and one set will be returned to the Contractor. As required by the Contracting Officer, the Contractor, upon completing the work under this contract, shall furnish a complete set of all shop drawings as finally approved. These drawings shall show all changes and revisions made up to the time the work is completed and accepted.

(i) This clause shall be included in all subcontracts at any tier. It shall be the responsibility of the Contractor to ensure that all shop drawings prepared by subcontractors are submitted to the Contracting Officer.

10. As-Built Drawings

(a) "As-built drawings," as used in this clause, means drawings submitted by the Contractor or subcontractor at any tier to show the construction of a particular structure or work as actually completed under the contract. "As-built drawings" shall be synonymous with "Record drawings."

(b) As required by the Contracting Officer, the Contractor shall provide the Contracting Officer accurate information to be used in the preparation of permanent as-built drawings. For this purpose, the Contractor shall record on one set of contract drawings all changes from the installations originally indicated, and record final locations of underground lines by depth from finish grade and by accurate horizontal offset distances to permanent surface improvements such as buildings, curbs, or edges of walks.

(c) This clause shall be included in all subcontracts at any tier. It shall be the responsibility of the Contractor to ensure that all as-built drawings prepared by subcontractors are submitted to the Contracting Officer.

11. Material and Workmanship

(a) All equipment, material, and articles furnished under this contract shall be new and of the most suitable grade for the purpose intended, unless otherwise specifically provided in this contract. References in the contract to equipment, material, articles, or patented processes by trade name, make, or catalog number, shall be regarded as establishing a standard of quality and shall not be construed as limiting competition. The Contractor may, at its option, use any equipment, material, article, or process that, in the judgment of, and as approved by the Contracting Officer, is equal to that named in the specifications, unless otherwise specifically provided in this contract.

(b) Approval of equipment and materials.

(1) The Contractor shall obtain the Contracting Officer's approval of the machinery and mechanical and other equipment to be incorporated into the work. When requesting approval, the Contractor shall furnish to the Contracting Officer the name of the manufacturer, the model number, and other information concerning the performance, capacity, nature, and rating of the machinery and mechanical and other equipment. When required by this contract or by the Contracting Officer, the Contractor shall also obtain the Contracting Officer's approval of the material or articles which the Contractor contemplates incorporating into the work. When requesting approval, the Contractor shall provide full information concerning the material or articles. Machinery, equipment, material, and articles that do not have the required approval shall be installed or used at the risk of subsequent rejection.

(2) When required by the specifications or the Contracting Officer, the Contractor shall submit appropriately marked samples (and certificates related to them) for approval at the Contractor's expense, with all shipping charges prepaid. The Contractor shall label, or otherwise properly mark on the container, the material or product represented, its place of origin, the name of the producer, the Contractor's name, and the identification of the construction project for which the material or product is intended to be used.

(3) Certificates shall be submitted in triplicate, describing each sample submitted for approval and certifying that the material, equipment or accessory complies with contract requirements. The certificates shall include the name and brand of the product, name of manufacturer, and the location where produced.

(4) Approval of a sample shall not constitute a waiver of the PHA right to demand full compliance with contract requirements. Materials, equipment and accessories may be rejected for cause even though samples have been approved.

(5) Wherever materials are required to comply with recognized standards or specifications, such specifications shall be accepted as establishing the technical qualities and testing methods, but shall not govern the number of tests required to be made nor modify other contract requirements. The Contracting Officer may require laboratory test reports on items submitted for approval or may approve materials on the basis of data submitted in certificates with samples. Check tests will be made on materials delivered for use only as frequently as the Contracting Officer determines necessary to insure compliance of materials with the specifications. The Contractor will assume all costs of retesting materials which fail to meet contract requirements and/or testing materials offered in substitution for those found deficient.

(6) After approval, samples will be kept in the Project office until completion of work. They may be built into the work after a substantial quantity of the materials they represent has been built in and accepted.

(c) Requirements concerning lead-based paint. The Contractor shall comply with the requirements concerning lead-based paint contained in the Lead-Based Paint Poisoning Prevention Act (42 U.S.C. 4821-4846) as implemented by 24 CFR Part 35.

12. Permits and Codes

(a) The Contractor shall give all notices and comply with all applicable laws, ordinances, codes, rules and regulations. Notwithstanding the requirement of the Contractor to comply with the drawings and specifications in the contract, all work installed shall comply with all applicable codes and regulations as amended by any

waivers. Before installing the work, the Contractor shall examine the drawings and the specifications for compliance with applicable codes and regulations bearing on the work and shall immediately report any discrepancy it may discover to the Contracting Officer. Where the requirements of the drawings and specifications fail to comply with the applicable code or regulation, the Contracting Officer shall modify the contract by change order pursuant to the clause entitled Changes herein to conform to the code or regulation.

(b) The Contractor shall secure and pay for all permits, fees, and licenses necessary for the proper execution and completion of the work. Where the PHA can arrange for the issuance of all or part of these permits, fees and licenses, without cost to the Contractor, the contract amount shall be reduced accordingly.

13. Health, Safety, and Accident Prevention

(a) In performing this contract, the Contractor shall:

(1) Ensure that no laborer or mechanic shall be required to work in surroundings or under working conditions which are unsanitary, hazardous, or dangerous to his/her health and/or safety as determined under construction safety and health standards promulgated by the Secretary of Labor by regulation;

(2) Protect the lives, health, and safety of other persons;

(3) Prevent damage to property, materials, supplies, and equipment; and,

(4) Avoid work interruptions.

(b) For these purposes, the Contractor shall:

(1) Comply with regulations and standards issued by the Secretary of Labor at 29 CFR Part 1926. Failure to comply may result in imposition of sanctions pursuant to the Contract Work Hours and Safety Standards Act (Public Law 91-54, 83 Stat. 96), 40 U.S.C. 3701 et seq.; and

(2) Include the terms of this clause in every subcontract so that such terms will be binding on each subcontractor.

(c) The Contractor shall maintain an accurate record of exposure data on all accidents incident to work performed under this contract resulting in death, traumatic injury, occupational disease, or damage to property, materials, supplies, or equipment, and shall report this data in the manner prescribed by 29 CFR Part 1904.

(d) The Contracting Officer shall notify the Contractor of any noncompliance with these requirements and of the corrective action required. This notice, when delivered to the Contractor or the Contractor's representative at the site of the work, shall be deemed sufficient notice of the noncompliance and corrective action required. After receiving the notice, the Contractor shall immediately take corrective action. If the Contractor fails or refuses to take corrective action promptly, the Contracting Officer may issue an order stopping all or part of the work until satisfactory corrective action has been taken. The Contractor shall not base any claim or request for equitable adjustment for additional time or money on any stop order issued under these circumstances.

(e) The Contractor shall be responsible for its subcontractors' compliance with the provisions of this clause. The Contractor shall take such action with respect to any subcontract as the PHA, the Secretary of Housing and Urban Development, or the Secretary of Labor shall direct as a means of enforcing such provisions.

14. Temporary Heating

The Contractor shall provide and pay for temporary heating, covering, and enclosures necessary to properly protect all work and materials against damage by dampness and cold, to dry out the work, and to facilitate the completion of the work. Any permanent heating equipment used shall be turned over to the PHA in the condition and at the time required by the specifications.

15. Availability and Use of Utility Services

(a) The PHA shall make all reasonably required amounts of utilities available to the Contractor from existing outlets and supplies, as specified in the contract. Unless otherwise provided in the contract, the amount of each utility service consumed shall be charged to or paid for by the Contractor at prevailing rates charged to the PHA or, where the utility is produced by the PHA, at reasonable rates determined by the Contracting Officer. The Contractor shall carefully conserve any utilities furnished without charge.

(b) The Contractor, at its expense and in a manner satisfactory to the Contracting Officer, shall install and maintain all necessary temporary connections and distribution lines, and all meters required to measure the amount of each utility used for the purpose of determining charges. Before final acceptance of the work by the PHA, the Contractor shall remove all the temporary connections, distribution lines, meters, and associated paraphernalia.

16. Protection of Existing Vegetation, Structures, Equipment, Utilities, and Improvements

(a) The Contractor shall preserve and protect all structures, equipment, and vegetation (such as trees, shrubs, and grass) on or adjacent to the work site, which are not to be removed under this contract, and which do not unreasonably interfere with the work required under this contract.

(b) The Contractor shall only remove trees when specifically authorized to do so, and shall avoid damaging vegetation that will remain in place. If any limbs or branches of trees are broken during performance of this contract, or by the careless operation of equipment, or by workmen, the Contractor shall trim those limbs or branches with a clean cut and paint the cut with a tree-pruning compound as directed by the Contracting Officer.

(c) The Contractor shall protect from damage all existing improvements and utilities (1) at or near the work site and (2) on adjacent property of a third party, the locations of which are made known to or should be known by the Contractor. Prior to disturbing the ground at the construction site, the Contractor shall ensure that all underground utility lines are clearly marked.

(d) The Contractor shall shore up, brace, underpin, secure, and protect as necessary all foundations and other parts of existing structures adjacent to, adjoining, and in the vicinity of the site, which may be affected by the excavations or other operations connected with the construction of the project.

(e) Any equipment temporarily removed as a result of work under this contract shall be protected, cleaned, and replaced in the same condition as at the time of award of this contract.

(f) New work which connects to existing work shall correspond in all respects with that to which it connects and/or be similar to existing work unless otherwise required by the specifications.

(g) No structural members shall be altered or in any way weakened without the written authorization of the Contracting Officer, unless such work is clearly specified in the plans or specifications.

(h) If the removal of the existing work exposes discolored or unfinished surfaces, or work out of alignment, such surfaces shall be refinished, or the material replaced as necessary to make the continuous work uniform and harmonious. This, however, shall not be construed to require the refinishing or reconstruction of dissimilar finishes previously exposed, or finished surfaces in good condition, but in different planes or on different levels **Construction** when brought together by the removal of intervening work, unless such refinishing or reconstruction is specified in the plans or specifications.

(i) The Contractor shall give all required notices to any adjoining or adjacent property owner or other party before the commencement of any work.

(j) The Contractor shall indemnify and save harmless the PHA from any damages on account of settlement or the loss of lateral support of adjoining property, any damages from changes in topography affecting drainage, and from all loss or expense and all damages for which the PHA may become liable in consequence of such injury or damage to adjoining and adjacent structures and their premises.

(k) The Contractor shall repair any damage to vegetation, structures, equipment, utilities, or improvements, including those that are the property of a third party, resulting from failure to comply with the requirements of this contract or failure to exercise reasonable care in performing the work. If the Contractor fails or refuses to repair the damage promptly, the Contracting Officer may have the necessary work performed and charge the cost to the Contractor.

17. Temporary Buildings and Transportation of Materials

(a) Temporary buildings (e.g., storage sheds, shops, offices, sanitary facilities) and utilities may be erected by the Contractor only with the approval of the Contracting Officer and shall be built with labor and materials furnished by the Contractor without expense to the PHA. The temporary buildings and utilities shall remain the property of the Contractor and shall be removed by the Contractor at its expense upon completion of the work. With the written consent of the Contracting Officer, the buildings and utilities may be abandoned and need not be removed.

(b) The Contractor shall, as directed by the Contracting Officer, use only established roadways, or use temporary roadways constructed by the Contractor when and as authorized by the Contracting Officer. When materials are transported in prosecuting the work, vehicles shall not be loaded beyond the loading capacity recommended by the manufacturer of the vehicle or prescribed by any federal, state, or local law or regulation. When it is necessary to cross curbs or sidewalks, the Contractor shall protect them from damage. The Contractor shall repair or pay for the repair of any damaged curbs, sidewalks, or roads.

18. Clean Air and Water

The contactor shall comply with the Clean Air Act, as amended, 42 USC 7401 et seq., the Federal Water Pollution Control Water Act, as amended, 33 U.S.C. 1251 et seq., and standards issued pursuant thereto in the facilities in which this contract is to be performed.

19. Energy Efficiency

The Contractor shall comply with mandatory standards and policies relating to energy efficiency which are contained in the energy conservation plan issued in compliance with the Energy Policy and Conservation Act (Pub.L. 94-163) for the State in which the work under the contract is performed.

20. Inspection and Acceptance of

(a) Definitions. As used in this clause -

(1) “Acceptance” means the act of an authorized representative of the PHA by which the PHA approves and assumes ownership of the work performed under this contract. Acceptance may be partial or complete.

(2) “Inspection” means examining and testing the work performed under the contract (including, when appropriate, raw materials, equipment, components, and intermediate assemblies) to determine whether it conforms to contract requirements.

(3) “Testing” means that element of inspection that determines the properties or elements, including functional operation of materials, equipment, or their components, by the application of established scientific principles and procedures.

(b) The Contractor shall maintain an adequate inspection system and perform such inspections as will ensure that the work performed under the contract conforms to contract requirements. All work is subject to PHA inspection and test at all places and at all reasonable times before acceptance to ensure strict compliance with the terms of the contract.

(c) PHA inspections and tests are for the sole benefit of the PHA and do not: (1) relieve the Contractor of responsibility for providing adequate quality control measures; (2) relieve the Contractor of responsibility for loss or damage of the material before acceptance; (3) constitute or imply acceptance; or, (4) affect the continuing rights of the PHA after acceptance of the completed work under paragraph (j) below.

(d) The presence or absence of the PHA inspector does not relieve the Contractor from any contract requirement, nor is the inspector authorized to change any term or condition of the specifications without the Contracting Officer’s written authorization. All instructions and approvals with respect to the work shall be given to the Contractor by the Contracting Officer.

(e) The Contractor shall promptly furnish, without additional charge, all facilities, labor, and material reasonably needed for performing such safe and convenient inspections and tests as may be required by the Contracting Officer. The PHA may charge to the Contractor any additional cost of inspection or test when work is not ready at the time specified by the Contractor for inspection or test, or when prior rejection makes reinspection or retest necessary. The PHA shall perform all inspections and tests in a manner that will not unnecessarily delay the work. Special, full size, and performance tests shall be performed as described in the contract.

(f) The PHA may conduct routine inspections of the construction site on a daily basis.

(g) The Contractor shall, without charge, replace or correct work found by the PHA not to conform to contract requirements, unless the PHA decides that it is in its interest to accept the work with an appropriate adjustment in contract price. The Contractor shall promptly segregate and remove rejected material from the premises.

(h) If the Contractor does not promptly replace or correct rejected work, the PHA may (1) by contract or otherwise, replace or correct the work and charge the cost to the Contractor, or (2) terminate for default the Contractor's right to proceed.

(i) If any work requiring inspection is covered up without approval of the PHA, it must, if requested by the Contracting Officer, be uncovered at the expense of the Contractor. If at any time before final acceptance of the entire work, the **Construction** PHA considers it necessary or advisable, to examine work already completed by removing or tearing it out, the Contractor, shall on request, promptly furnish all necessary facilities, labor, and material. If such work is found to be defective or nonconforming in any material respect due to the fault of the Contractor or its subcontractors, the Contractor shall defray all the expenses of the examination and of satisfactory reconstruction. If, however, such work is found to meet the requirements of the contract, the Contracting Officer shall make an equitable adjustment to cover the cost of the examination and reconstruction, including, if completion of the work was thereby delayed, an extension of time.

(j) The Contractor shall notify the Contracting Officer, in writing, as to the date when in its opinion all or a designated portion of the work will be substantially completed and ready for inspection. If the Architect determines that the state of preparedness is as represented, the PHA will promptly arrange for the inspection. Unless otherwise specified in the contract, the PHA shall accept, as soon as practicable after completion and inspection, all work required by the contract or that portion of the work the Contracting Officer determines and designates can be accepted separately. Acceptance shall be final and conclusive except for latent defects, fraud, gross mistakes amounting to fraud, or the PHA's right under any warranty or guarantee.

21. Use and Possession Prior to Completion

(a) The PHA shall have the right to take possession of or use any completed or partially completed part of the work. Before taking possession of or using any work, the Contracting Officer shall furnish the Contractor a list of items of work remaining to be performed or corrected on those portions of the work that the PHA intends to take possession of or use. However, failure of the Contracting Officer to list any item of work shall not relieve the Contractor of responsibility for complying with the terms of the contract. The PHA's possession or use shall not be deemed an acceptance of any work under the contract.

(b) While the PHA has such possession or use, the Contractor shall be relieved of the responsibility for (1) the loss of or damage to the work resulting from the PHA's possession or use, notwithstanding the terms of the clause entitled Permits and Codes herein; (2) all maintenance costs on the areas occupied; and, (3) furnishing heat, light, power, and water used in the areas occupied without proper remuneration therefore. If prior possession or use by the PHA delays the progress of the work or causes additional expense to the Contractor, an equitable adjustment shall be made in the contract price or the time of completion, and the contract shall be modified in writing accordingly.

22. Warranty of Title

The Contractor warrants good title to all materials, supplies, and equipment incorporated in the work and agrees to deliver the premises together with all improvements thereon free from any claims, liens or charges, and agrees further that neither it nor any other person, firm or corporation shall have any right to a lien upon the premises or anything appurtenant thereto.

23. Warranty of

(a) In addition to any other warranties in this contract, the Contractor warrants, except as provided in paragraph (j) of this clause, that work performed under this contract conforms to the contract requirements and is free of any defect in equipment, material, or workmanship performed by the Contractor or any subcontractor or supplier at any tier. This warranty shall continue for a period of _____ (one year unless otherwise indicated) from the date of final acceptance of the work. If the PHA takes possession of any part of the work before final acceptance, this warranty shall continue for a period of (one year unless otherwise indicated) from the date that the PHA takes possession.

(b) The Contractor shall remedy, at the Contractor's expense, any failure to conform, or any defect. In addition, the Contractor shall remedy, at the Contractor's expense, any damage to PHA-owned or controlled real or personal property when the damage is the result of—

(1) The Contractor's failure to conform to contract requirements; or

(2) Any defects of equipment, material, workmanship or design furnished by the Contractor.

(c) The Contractor shall restore any work damaged in fulfilling the terms and conditions of this clause. The Contractor's warranty with respect to work repaired or replaced will run for (one year unless otherwise indicated) from the date of repair or replacement.

(d) The Contracting Officer shall notify the Contractor, in writing, within a reasonable time after the discovery of any failure, defect or damage.

(e) If the Contractor fails to remedy any failure, defect, or damage within a reasonable time after receipt of notice, the PHA shall have the right to replace, repair or otherwise remedy the failure, defect, or damage at the Contractor's expense.

(f) With respect to all warranties, express or implied, from subcontractors, manufacturers, or suppliers for work performed and materials furnished under this contract, the Contractor shall:

(1) Obtain all warranties that would be given in normal commercial practice;

(2) Require all warranties to be executed in writing, for the benefit of the PHA; and,

(3) Enforce all warranties for the benefit of the PHA.

(g) In the event the Contractor's warranty under paragraph (a) of this clause has expired, the PHA may bring suit at its own expense to enforce a subcontractor's, manufacturer's or supplier's warranty.

(h) Unless a defect is caused by the negligence of the Contractor or subcontractor or supplier at any tier, the Contractor shall not be liable for the repair of any defect of material or design furnished by the PHA nor for the repair of any damage that results from any defect in PHA furnished material or design.

(i) Notwithstanding any provisions herein to the contrary, the establishment of the time periods in paragraphs (a) and (c) above relate only to the specific obligation of the Contractor to correct the work, and have no relationship to the time within which its obligation to comply with the contract may be sought to be enforced, nor to the time within which proceedings may be commenced to establish the Contractor's liability with respect to its obligation other than specifically to correct the work.

(j) This warranty shall not limit the PHA's rights under the Inspection and Acceptance of Construction clause of this contract with respect to latent defects, gross mistakes or fraud.

24. Prohibition Against Liens

The Contractor is prohibited from placing a lien on the PHA's property. This prohibition shall apply to all subcontractors at any tier and all materials suppliers.

Administrative Requirements

25. Contract Period

this contract within calendar days of the effective date of the contract, or within the time schedule established in the notice to proceed issued by the Contracting Officer.

26. Order of Provisions

accordance with the terms and conditions of the

In the event of a conflict between these General Conditions and the Specifications, the General Conditions shall prevail. In the event of a conflict between the contract and any applicable state or local law or regulation, the state or local law or regulation shall prevail; provided that such state or local law or regulation does not conflict with, or is less restrictive than applicable federal law, regulation, or Executive Order. In the event of such a conflict, applicable federal law, regulation, and Executive Order shall prevail.

27. Payments

retain ten (10) percent of the amount of progress

(a) The PHA shall pay the Contractor the price as provided in this contract.

(b) The PHA shall make progress payments approximately every 30 days as the work proceeds, on estimates of work accomplished which meets the standards of quality established under the contract, as approved by the Contracting Officer. The PHA may, subject to written determination and approval of the Contracting Officer, make more frequent payments to contractors which are qualified small businesses.

(c) Before the first progress payment under this contract, the Contractor shall furnish, in such detail as requested by the Contracting Officer, a breakdown of the total contract price showing the amount included therein for each principal category of the work, which shall substantiate the payment amount requested in order to provide a basis for determining progress payments. The breakdown shall be approved by the Contracting Officer and must be acceptable to HUD. If the contract covers more than one project, the Contractor shall furnish a separate breakdown for each. The values and quantities employed in making up this breakdown are for determining the amount of progress payments and shall not be construed as a basis for additions to or deductions from the contract price. The Contractor shall prorate its overhead and profit over the construction period of the contract.

(d) The Contractor shall submit, on forms provided by the PHA, periodic estimates showing the value of the work performed during each period based upon the approved

submitted not later than _____ days in advance of the date set for payment and are subject to correction and revision as required. The estimates must be approved by the Contracting Officer with the concurrence of the Architect prior to payment. If the contract covers more than one project, the Contractor shall furnish a separate progress payment estimate for each.

(e) Along with each request for progress payments and the required estimates, the Contractor shall furnish the following certification, or payment shall not be made: I hereby certify, to the best of my knowledge and belief, that:

(1) The amounts requested are only for performance in accordance with the specifications, terms, and conditions of the contract;

(2) Payments to subcontractors and suppliers have been made from previous payments received under the contract, and timely payments will be made from the proceeds of the payment covered by this certification, in accordance with subcontract agreements; and,

(3) This request for progress payments does not include any amounts which the prime contractor intends to withhold or retain from a subcontractor or supplier in

subcontract.

Name:

Title:

Date:

(f) Except as otherwise provided in State law, the PHA shall

payments until completion and acceptance of all work under the contract; except, that if upon completion of 50 percent of the work, the Contracting Officer, after consulting with the Architect, determines that the Contractor's performance and progress are satisfactory, the PHA may make the remaining payments in full for the work subsequently completed. If the Contracting Officer subsequently determines that the Contractor's performance and progress are unsatisfactory, the PHA shall reinstate the ten (10) percent (or other percentage as provided in State law) retainage until such time as the Contracting Officer determines that performance and progress are satisfactory.

(g) The Contracting Officer may authorize material delivered on the site and preparatory work done to be taken into consideration when computing progress payments.

Material delivered to the Contractor at locations other than the site may also be taken into consideration if the Contractor furnishes satisfactory evidence that (1) it has acquired title to such material; (2) the material is properly stored in a bonded warehouse, storage yard, or similar suitable place as may be approved by the Contracting Officer; (3) the material is insured to cover its full value; and (4) the material will be used to perform this contract. Before any progress payment which includes delivered material is made, the Contractor shall furnish such documentation as the Contracting Officer may require to assure the protection of the PHA's interest in such materials. The Contractor shall remain responsible for such stored material notwithstanding the transfer of title to the PHA.

(h) All material and work covered by progress payments made shall, at the time of payment become the sole property of the PHA, but this shall not be construed as (1) relieving the Contractor from the sole responsibility for all material and work upon which payments have been made or the restoration of any damaged work; or, (2) waiving the right of the PHA to require the fulfillment of all of the terms of the contract. In the event the work of the Contractor has been damaged by other contractors or persons other than employees of the PHA in the course of their employment, the Contractor shall restore such damaged work without cost to the PHA and to seek redress for its damage only from those who directly caused it.

(i) The PHA shall make the final payment due the Contractor under this contract after (1) completion and final acceptance of all work; and (2) presentation of release of all claims against the PHA arising by virtue of this contract, other than claims, in stated amounts, that the Contractor has specifically excepted from the operation of the release. Each such exception shall embrace no more than one claim, the basis and scope of which shall be clearly defined. The amounts for such excepted claims shall not be included in the request for final payment. A release may also be required of the assignee if the Contractor's claim to amounts payable under this contract has been assigned.

(j) Prior to making any payment, the Contracting Officer may require the Contractor to furnish receipts or other evidence of payment from all persons performing work and supplying material to the Contractor, if the Contracting Officer determines such evidence is necessary to substantiate claimed costs.

(k) The PHA shall not; (1) determine or adjust any claims for payment or disputes arising there under between the Contractor and its subcontractors or material suppliers; or, (2) withhold any moneys for the protection of the subcontractors or material suppliers. The failure or refusal of the PHA to withhold moneys from the Contractor shall in nowise impair the obligations of any surety or sureties under any bonds furnished under this contract.

28. Contract Modifications

(a) Only the Contracting Officer has authority to modify any term or condition of this contract. Any contract modification shall be authorized in writing.

(b) The Contracting Officer may modify the contract unilaterally (1) pursuant to a specific authorization stated in a contract clause (e.g., Changes); or (2) for administrative matters which do not change the rights or responsibilities of the parties (e.g., change in the PHA address). All other contract modifications shall be in the form of supplemental agreements signed by the Contractor and the Contracting Officer.

(c) When a proposed modification requires the approval of HUD prior to its issuance (e.g., a change order that exceeds the PHA's approved threshold), such modification shall not be effective until the required approval is received by the PHA.

29. Changes

(a) The Contracting Officer may, at any time, without notice to the sureties, by written order designated or indicated to be a change order, make changes in the work within the general scope of the contract including changes:
(1) In the specifications (including drawings and designs);
(2) In the method or manner of performance of the work;
(3) PHA-furnished facilities, equipment, materials, services, or site; or,
(4) Directing the acceleration in the performance of the work.

(b) Any other written order or oral order (which, as used in this paragraph (b), includes direction, instruction, interpretation, or determination) from the Contracting Officer that causes a change shall be treated as a change order under this clause; provided, that the Contractor gives the Contracting Officer written notice stating (1) the date, circumstances and source of the order and (2) that the Contractor regards the order as a change order.

(c) Except as provided in this clause, no order, statement or conduct of the Contracting Officer shall be treated as a change under this clause or entitle the Contractor to an equitable adjustment.

(d) If any change under this clause causes an increase or decrease in the Contractor's cost of, or the time required for the performance of any part of the work under this contract, whether or not changed by any such order, the Contracting Officer shall make an equitable adjustment and modify the contract in writing. However, except for a adjustment based on defective specifications, no proposal for any change under paragraph (b) above shall be allowed for any costs incurred more than 20 days (5 days for oral orders) before the Contractor gives written notice as required. In the case of defective specifications for which the PHA is responsible, the equitable adjustment shall include any increased cost reasonably incurred by the Contractor in attempting to comply with the defective specifications.

(e) The Contractor must assert its right to an adjustment under this clause within 30 days after (1) receipt of a written change order under paragraph (a) of this clause, or (2) the furnishing of a written notice under paragraph (b) of this clause, by submitting a written statement describing the general nature and the amount of the proposal. If the facts justify it, the Contracting Officer may extend the period for submission. The proposal may be included in the notice required under paragraph (b) above. No proposal by the Contractor for an equitable adjustment shall be allowed if asserted after final payment under this contract.

(f) The Contractor's written proposal for equitable adjustment shall be submitted in the form of a lump sum proposal supported with an itemized breakdown of all increases and decreases in the contract in at least the following details:

(1) Direct Costs. Materials (list individual items, the quantity and unit cost of each, and the aggregate cost); Transportation and delivery costs associated with materials; Labor breakdowns by hours or unit costs (identified with specific work to be performed); Construction equipment exclusively necessary for the change; Costs of preparation and/ or revision to shop drawings resulting from the change; Worker's Compensation and Public Liability Insurance; Employment taxes under FICA and FUTA; and, Bond Costs when size of change warrants revision.

(2) Indirect Costs. Indirect costs may include overhead, general and administrative expenses, and fringe benefits not normally treated as direct costs.

(3) Profit. The amount of profit shall be negotiated and may vary according to the nature, extent, and complexity of the work required by the change. The allowability of the direct and indirect costs shall be determined in accordance with the Contract Cost Principles and Procedures for Commercial Firms in Part 31 of the Federal Acquisition Regulation (48 CFR 1-31), as implemented by HUD Handbook 2210.18, in effect on the date of this contract. The Contractor shall not be allowed a profit on the profit received by any subcontractor. Equitable adjustments for deleted work shall include a credit for profit and may include a credit for indirect costs. On proposals covering both increases and decreases in the amount of the contract, the application of indirect costs and profit shall be on the net-change in direct costs for the Contractor or subcontractor performing the work.

(g) The Contractor shall include in the proposal its request for time extension (if any), and shall include sufficient information and dates to demonstrate whether and to what extent the change will delay the completion of the contract in its entirety.

(h) The Contracting Officer shall act on proposals within 30 days after their receipt, or notify the Contractor of the date when such action will be taken.

(i) Failure to reach an agreement on any proposal shall be a dispute under the clause entitled Disputes herein. Nothing in this clause, however, shall excuse the Contractor from proceeding with the contract as changed.

(j) Except in an emergency endangering life or property, no change shall be made by the Contractor without a prior order from the Contracting Officer.

30. Suspension of Work

(a) The Contracting Officer may order the Contractor in writing to suspend, delay, or interrupt all or any part of the work of this contract for the period of time that the Contracting Officer determines appropriate for the convenience of the PHA.

(b) If the performance of all or any part of the work is, for an unreasonable period of time, suspended, delayed, or interrupted (1) by an act of the Contracting Officer in the administration of this contract, or (2) by the Contracting Officer's failure to act within the time specified (or within a reasonable time if not specified) in this contract an adjustment shall be made for any increase in the cost of performance of the contract (excluding profit) necessarily caused by such unreasonable suspension, delay, or interruption and the contract modified in writing accordingly. However, no adjustment shall be made under this clause for any suspension, delay, or interruption to the extent that performance would have been so suspended, delayed, or interrupted by any other cause, including the fault or negligence of the Contractor or for which any equitable adjustment is provided for or excluded under any other provision of this contract.

(c) A claim under this clause shall not be allowed (1) for any costs incurred more than 20 days before the Contractor shall have notified the Contracting Officer in writing of the act or failure to act involved (but this requirement shall not apply as to a claim resulting from a suspension order); and, (2) unless the claim, in an amount stated, is asserted in writing as soon as practicable after the termination of the suspension, delay, or interruption, but not later than the date of final payment under the contract.

31. Disputes

(a) "Claim," as used in this clause, means a written demand or written assertion by one of the contracting parties seeking, as a matter of right, the payment of money in a sum certain, the adjustment or interpretation of contract terms, or other relief arising under or relating to the contract. A claim arising under the contract, unlike a claim relating to the contract, is a claim that can be resolved under a contract clause that provides for the relief sought by the claimant. A voucher, invoice, or other routine request for payment that is not in dispute when submitted is not a claim. The submission may be converted to a claim by complying with the requirements of this clause, if it is disputed either as to liability or amount or is not acted upon in a reasonable time.

(b) Except for disputes arising under the clauses entitled Labor Standards - Davis Bacon and Related Acts, herein, all disputes arising under or relating to this contract, including any claims for damages for the alleged breach thereof which are not disposed of by agreement, shall be resolved under this clause.

(c) All claims by the Contractor shall be made in writing and submitted to the Contracting Officer for a written decision. A claim by the PHA against the Contractor shall be subject to a written decision by the Contracting Officer.

(d) The Contracting Officer shall, within 60 (unless otherwise indicated) days after receipt of the request, decide the claim or notify the Contractor of the date by which the decision will be made.

(e) The Contracting Officer's decision shall be final unless the Contractor (1) appeals in writing to a higher level in the PHA in accordance with the PHA's policy and procedures, (2) refers the appeal to an independent mediator or arbitrator, or (3) files suit in a court of competent jurisdiction. Such appeal must be made within (30 unless otherwise indicated) days after receipt of the Contracting Officer's decision.

(f) The Contractor shall proceed diligently with performance of this contract, pending final resolution of any request for relief, claim, appeal, or action arising under or relating to the contract, and comply with any decision of the Contracting Officer.

32. Default

(a) If the Contractor refuses or fails to prosecute the work, or any separable part thereof, with the diligence that will insure its completion within the time specified in this contract, or any extension thereof, or fails to complete said work within this time, the Contracting Officer may, by written notice to the Contractor, terminate the right to

proceed with the work (or separable part of the work) that has been delayed. In this event, the PHA may take over the work and complete it, by contract or otherwise, and may take possession of and use any materials, equipment, and plant on the work site necessary for completing the work. The Contractor and its sureties shall be liable for any damage to the PHA resulting from the Contractor's refusal or failure to complete the work within the specified time, whether or not the Contractor's right to proceed with the work is terminated. This liability includes any increased costs incurred by the PHA in completing the work.

(b) The Contractor's right to proceed shall not be terminated or the Contractor charged with damages under this clause if—

(1) The delay in completing the work arises from unforeseeable causes beyond the control and without the fault or negligence of the Contractor. Examples of such causes include (i) acts of God, or of the public enemy, (ii) acts of the PHA or other governmental entity in either its sovereign or contractual capacity, (iii) acts of another contractor in the performance of a contract with the PHA, (iv) fires, (v) floods, (vi) epidemics, (vii) quarantine restrictions, (viii) strikes, (ix) freight embargoes, (x) unusually severe weather, or (xi) delays of subcontractors or suppliers at any tier arising from unforeseeable causes beyond the control and without the fault or negligence of both the Contractor and the subcontractors or suppliers; and

(2) The Contractor, within days (10 days unless otherwise indicated) from the beginning of such delay (unless extended by the Contracting Officer) notifies the Contracting Officer in writing of the causes of delay. The Contracting Officer shall ascertain the facts and the extent of the delay. If, in the judgment of the Contracting Officer, the findings of fact warrant such action, time for completing the work shall be extended by written modification to the contract. The findings of the Contracting Officer shall be reduced to a written decision which shall be subject to the provisions of the Disputes clause of this contract.

(c) If, after termination of the Contractor's right to proceed, it is determined that the Contractor was not in default, or that the delay was excusable, the rights and obligations of the parties will be the same as if the termination had been for convenience of the PHA.

33. Liquidated Damages

(a) If the Contractor fails to complete the work within the time specified in the contract, or any extension, as specified in the clause entitled Default of this contract, the Contractor shall pay to the PHA as liquidated damages, the sum of $ _____ Contracting Officer insert amount] for each day of delay. If different completion dates are specified in the contract for separate parts or stages of the work, the amount of liquidated damages shall be assessed on those parts or stages which are delayed. To the extent that the Contractor's delay or nonperformance is excused under another clause in this contract, liquidated damages shall not be due the PHA. The Contractor remains liable for damages caused other than by delay.

(b) If the PHA terminates the Contractor's right to proceed, the resulting damage will consist of liquidated damages until such reasonable time as may be required for final completion of the work together with any increased costs occasioned the PHA in completing the work.

(c) If the PHA does not terminate the Contractor's right to proceed, the resulting damage will consist of liquidated damages until the work is completed or accepted.

34. Termination for Convenience

(a) The Contracting Officer may terminate this contract in whole, or in part, whenever the Contracting Officer determines that such termination is in the best interest of the PHA. Any such termination shall be effected by delivery to the Contractor of a Notice of Termination specifying the extent to which the performance of the work under the contract is terminated, and the date upon which such termination becomes effective.

(b) If the performance of the work is terminated, either in whole or in part, the PHA shall be liable to the Contractor for reasonable and proper costs resulting from such termination upon the receipt by the PHA of a properly presented claim setting out in detail: (1) the total cost of the work performed to date of termination less the total amount of contract payments made to the Contractor; (2) the cost (including reasonable profit) of settling and paying claims under subcontracts and material orders for work performed and materials and supplies delivered to the site, payment for which has not been made by the PHA to the Contractor or by the Contractor to the subcontractor or supplier; (3) the cost of preserving and protecting the work already performed until the PHA or assignee takes possession thereof or assumes responsibility therefore; (4) the actual or estimated cost of legal and accounting services reasonably necessary to prepare and present the termination claim to the PHA; and (5) an amount constituting a reasonable profit on the value of the work performed by the Contractor.

(c) The Contracting Officer will act on the Contractor's claim within days (60 days unless otherwise indicated) of receipt of the Contractor's claim.

(d) Any disputes with regard to this clause are expressly made subject to the provisions of the Disputes clause of this contract.

35. Assignment of Contract

The Contractor shall not assign or transfer any interest in this contract; except that claims for monies due or to become due from the PHA under the contract may be assigned to a bank, trust company, or other financial institution. Such assignments of claims shall only be made with the written concurrence of the Contracting Officer. If the Contractor is a partnership, this contract shall inure to the benefit of the surviving or remaining member(s) of such partnership as approved by the Contracting Officer.

36. Insurance

(a) Before commencing work, the Contractor and each subcontractor shall furnish the PHA with certificates of insurance showing the following insurance is in force and will insure all operations under the Contract:

(1) Workers' Compensation, in accordance with state or Territorial Workers' Compensation laws.

(2) Commercial General Liability with a combined single limit for bodily injury and property damage of not less than $ _____ [Contracting Officer insert amount]

per occurrence to protect the Contractor and each subcontractor against claims for bodily injury or death and damage to the property of others. This shall cover the use of all equipment, hoists, and vehicles on the site(s) not covered by Automobile Liability under (3) below. If the Contractor has a "claims made" policy, then the following additional requirements apply: the policy must provide a "retroactive date" which must be on or before the execution date of the Contract; and the extended reporting period may not be less than five years following the completion date of the Contract.

(3) Automobile Liability on owned and non -owned motor vehicles used on the site(s) or in connection therewith for a combined single limit for bodily injury and property damage of not less than $ _____ [Contracting Officer insert amount] per occurrence.

(b) Before commencing work, the Contractor shall furnish the PHA with a certificate of insurance evidencing that Builder's Risk (fire and extended coverage) Insurance on all work in place and/or materials stored at the building site(s), including foundations and building equipment, is in force. The Builder's Risk Insurance shall be for the benefit of the Contractor and the PHA as their interests may appear and each shall be named in the policy or policies as an insured. The Contractor in installing equipment supplied by the PHA shall carry insurance on such equipment from the time the Contractor takes possession thereof until the Contract work is accepted by the PHA. The Builder's Risk Insurance need not be carried on excavations, piers, footings, or foundations until such time as work on the superstructure is started. It need not be carried on landscape work. Policies shall furnish coverage at all times for the full cash value of all completed construction, as well as materials in place and/or stored at the site(s), whether or not partial payment has been made by the PHA. The Contractor may terminate this insurance on buildings as of the date taken over for occupancy by the PHA. The Contractor is not required to carry Builder's Risk Insurance for modernization work which does not involve structural alterations or additions and where the PHA's existing fire and extended coverage policy can be endorsed to include such work.

(c) All insurance shall be carried with companies which are financially responsible and admitted to do business in the State in which the project is located. If any such insurance is due to expire during the construction period, the Contractor (including subcontractors, as applicable) shall not permit the coverage to lapse and shall furnish evidence of coverage to the Contracting Officer. All certificates of insurance, as evidence of coverage, shall provide that no coverage may be canceled or non-renewed by the insurance company until at least 30 days prior written notice has been given to the Contracting Officer.

37. Subcontracts

(a) Definitions. As used in this contract -

(1) "Subcontract" means any contract, purchase order, or other purchase agreement, including modifications and change orders to the foregoing, entered into by a subcontractor to furnish supplies, materials, equipment, and services for the performance of the prime contract or a subcontract.

(2) "Subcontractor" means any supplier, vendor, or firm that furnishes supplies, materials, equipment, or services to or for the Contractor or another subcontractor.

(b) The Contractor shall not enter into any subcontract with any subcontractor who has been temporarily denied participation in a HUD program or who has been suspended or debarred from participating in contracting programs by any agency of the United States Government or of the state in which the work under this contract is to be performed.

(c) The Contractor shall be as fully responsible for the acts or omissions of its subcontractors, and of persons either directly or indirectly employed by them as for the acts or omissions of persons directly employed by the Contractor.

(d) The Contractor shall insert appropriate clauses in all subcontracts to bind subcontractors to the terms and conditions of this contract insofar as they are applicable to the work of subcontractors.

(e) Nothing contained in this contract shall create any contractual relationship between any subcontractor and the PHA or between the subcontractor and HUD.

38. Subcontracting with Small and Minority Firms, Women's Business Enterprise, and Labor Surplus Area Firms

The Contractor shall take the following steps to ensure that, whenever possible, subcontracts are awarded to small business firms, minority firms, women's business enterprises, and labor surplus area firms:

(a) Placing qualified small and minority businesses and women's business enterprises on solicitation lists;

(b) Ensuring that small and minority businesses and women's business enterprises are solicited whenever they are potential sources;

(c) Dividing total requirements, when economically feasible, into smaller tasks or quantities to permit maximum participation by small and minority businesses and women's business enterprises;

(d) Establishing delivery schedules, where the requirements of the contract permit, which encourage participation by small and minority businesses and women's business enterprises; and

(e) Using the services and assistance of the U.S. Small Business Administration, the Minority Business Development Agency of the U.S. Department of Commerce, and State and local governmental small business agencies.

39. Equal Employment Opportunity

During the performance of this contract, the Contractor/Seller agrees as follows:

(a) The Contractor/Seller shall not discriminate against any employee or applicant for employment because of of race color, religion, sex, sexual orientation, gender identity, disability, or national origin.

(b) The Contractor/Seller shall take affirmative action to ensure that applicants are employed, and that employees are treated during employment without regard to their race, color, religion, sex, sexual orientation, gender identity, disability, or national origin. Such action shall include, but not be limited to, (1) employment, (2) upgrading demotion, (4) transfer, (5) recruitment or recruitment advertising, (6) layoff or termination, (7) rates of pay or other forms of compensation, and (8) selection for training,including apprenticeship

(c) The Contractor/Seller agrees to post in conspicuous places available to employees and applicants for employment the notices to be provided by the Contracting Officer setting forth the provisions of this nondiscrimination clause.
(d) The Contractor/Seller shall, in all solicitations or advertisements for employees placed by or on behalf of the Contractor/Seller, state that all qualified applicants will receive consideration for employment without regard to race, color, religion, sex, or national origin.
(e) The Contractor/Seller shall send, to each labor union or representative of workers with which it has a collective bargaining agreement or other contract or understanding, the notice to be provided by the Contracting Officer advising the labor union or workers' representative of the Contractor's commitments under this clause, and post copies of the notice in conspicuous places available to employees and applicants for employment.
(f) The Contractor/Seller shall comply with Executive Order 11246, as amended, and the rules, regulations, and orders of the Secretary of Labor.
(g) The Contractor/Seller shall furnish all information and reports required by Executive Order 11246, as amended, Section 503 of the Rehabilitation Act of 1973, as amended, and by rules, regulations, and orders of the Secretary of Labor, or pursuant thereto. The Contractor/Seller shall permit access to its books, records, and accounts by the Secretary of Labor for purposes of investigation to ascertain compliance with such rules, regulations, and orders.
(h) In the event of a that the Contractor/Seller is in noncompliance with the nondiscrimination clauses of this contract or with any of such rules, regulations, or orders, this contract may be canceled, terminated or suspended in whole or in part and the contractor/seller may be declared ineligible for further Government contracts in accordance with procedures authorized in Executive Order 11246 of September 24, 1965, and such other sanctions may be imposed and remedies invoked as provided in Executive Order 11246 of September 24, 1965, or by rule, regulation, or order of the Secretary of Labor, or as otherwise provided by law.

(i)The contractor/seller will include the provisions of paragraphs (a) through (h) in every subcontract or purchase order unless exempted by rules, regulations, or orders of the Secretary of Labor issued pursuant to section 204 of Executive Order 11246 of September 24, 1965, so that such provisions will be binding upon each sub[contractor/seller] or vendor. The [contractor/seller] will take such action with respect to any subcontract or purchase order as may be directed by the Secretary of Labor as a means of enforcing such provisions in cluding sanctions for noncompliance: Provided, however, that in the event the [contractor/seller] becomes involved in, or is threatened with, litigation with a subcontractor or vendor as a result of such direction, the [contractor/seller] may request the United States to enter into such litigation to protect the interests of the United States.

(j) Compliance with the requirements of this clause shall be to the maximum extent consistent with, but not in derogation of, compliance with section 7(b) of the Indian Self-Determination and Education Assistance Act and the Indian Preference clause of this contract.

40. Employment, Training, and Contracting Opportunities for Low-Income Persons, Section 3 of the Housing and Urban Development Act of 1968.

(a) The work to be performed under this contract is subject to the requirements of Section 3 of the Housing and Urban Development Act of 1968, as amended, 12 U.S.C. 1701u (section 3). The purpose of section 3 is to ensure that employment and other economic opportunities generated by HUD assistance or HUD-assisted projects covered by Section 3, shall, to the greatest extent feasible, be directed to low- and very low-income persons, particularly persons who are recipients of HUD assistance for housing.
(b) The parties to this contract agree to comply with HUD's regulations in 24 CFR Part 75, which implement Section 3. As evidenced by their execution of this contract, the parties to this contract certify that they are under no contractual or other impediment that would prevent them from complying with the Part 75 regulations.
(c) The contractor agrees to send to each labor organization or representative of workers with which the contractor has a collective bargaining agreement or other understanding, if any, a notice advising the labor organization or workers' representative of the contractor's commitments under this section 3 clause and will post copies of the notice in conspicuous places at the work site where both employees and applicants for training and employment positions can see the notice. The notice shall describe the Section 3 prioritization requirements and shall state the minimum percentages of labor hour requirements established in the Benchmark Notice (FR-6085-N-04).
(d) The contractor agrees to include this section 3 clause in every subcontract subject to compliance with regulations in 24 CFR Part 75, and agrees to take appropriate action, as provided in an applicable provision of the subcontract or in this section 3 clause, upon a finding that the subcontractor is in violation of the regulations in 24 CFR Part 75. The contractor will not subcontract with any subcontractor where the contractor has notice or knowledge that the subcontractor has been found in violation of the regulations in 24 CFR Part 75.
(e) Noncompliance with HUD's regulations in 24 CFR Part 75 may result in sanctions, termination of this contract for default, and debarment or suspension from future HUD assisted contracts.
(f) Contracts, subcontracts, grants, or subgrants subject to Section 7(b) of the Indian Self-Determination and Education Assistance Act (25 U.S.C. 5307(b)) or subject to tribal preference requirements as authorized under 101(k) of the Native American Housing Assistance and Self-Determination Act (25 U.S.C. 4111(k)) must provide preferences in employment, training, and business opportunities to Indians and Indian organizations, and are therefore not subject to the requirements of 24 CFR Part 75.

41. Interest of Members of Congress

No member of or delegate to the Congress of the United States of America shall be admitted to any share or part of this contract or to any benefit that may arise therefrom.

42. Interest of Members, Officers, or Employees and Former Members, Officers, or Employees

No member, officer, or employee of the PHA, no member of the governing body of the locality in which the project is situated, no member of the governing body of the locality in which the PHA was activated, and no other public official of such locality or localities who exercises any functions or responsibilities with respect to the project, shall, during his or her tenure, or for one year thereafter, have any interest, direct or indirect, in this contract or the proceeds thereof.

43. Limitations on Payments made to Influence Certain Federal Financial Transactions

(a) The Contractor agrees to comply with Section 1352 of Title 31, United States Code which prohibits the use of Acts Federal appropriated funds to pay any person for influencing or attempting to influence an officer or employee of any agency, a Member of Congress, and officer or employee of Congress, or an employee of a Member of Congress in connection with any of the following covered Federal actions: the awarding of any Federal contract; the making of any Federal grant; the making of any Federal loan; the entering into of any cooperative agreement; or the modification of any Federal contract, grant, loan, or cooperative agreement.

(b) The Contractor further agrees to comply with the requirement of the Act to furnish a disclosure (OMB Standard Form LLL, Disclosure of Lobbying Activities) if any funds other than Federal appropriated funds (including profit or fee received under a covered Federal transaction) have been paid, or will be paid, to any person for influencing or attempting to influence an officer or employee of any agency, a Member of Congress, an officer or employee of Congress, or an employee of a Member of Congress in connection with a Federal contract, grant, loan, or cooperative agreement.

44. Royalties and Patents

The Contractor shall pay all royalties and license fees. It shall defend all suits or claims for infringement of any patent rights and shall save the PHA harmless from loss on account thereof; except that the PHA shall be responsible for all such loss when a particular design, process or the product of a particular manufacturer or manufacturers is specified and the Contractor has no reason to believe that the specified design, process, or product is an infringement. If, however, the Contractor has reason to believe that any design, process or product specified is an infringement of a patent, the Contractor shall promptly notify the Contracting Officer. Failure to give such notice shall make the Contractor responsible for resultant loss.

45. Examination and Retention of Contractor's Records

(a) The PHA, HUD, or Comptroller General of the United States, or any of their duly authorized representatives shall, until 3 years after final payment under this contract, have access to and the right to examine any of the Contractor's directly pertinent books, documents, papers, or other records involving transactions related to this contract for the purpose of making audit, examination, excerpts, and transcriptions.

(b) The Contractor agrees to include in first-tier subcontracts under this contract a clause substantially the same as paragraph (a) above. "Subcontract," as used in this clause, excludes purchase orders not exceeding $10,000.

(c) The periods of access and examination in paragraphs (a) and (b) above for records relating to (1) appeals under the Disputes clause of this contract, (2) litigation or settlement of claims arising from the performance of this contract, or (3) costs and expenses of this contract to which the PHA, HUD, or Comptroller General or any of their duly authorized representatives has taken exception shall continue until disposition of such appeals, litigation, claims, or exceptions.

46. Labor Standards - Davis-Bacon and Related

If the total amount of this contract exceeds $2,000, the Federal labor standards set forth in the clause below shall apply to the development or construction work to be performed under the contract.

(a) Minimum Wages.

(1) All laborers and mechanics employed under this contract in the development or construction of the project(s) involved will be paid unconditionally and not less often than once a week, and without subsequent deduction or rebate on any account (except such payroll deductions as are permitted by regulations issued by the Secretary of Labor under the Copeland Act (29 CFR Part 3)), the full amount of wages and bona fide fringe benefits (or cash equivalents thereof) due at time of payment computed at rates not less than those contained in the wage determination of the Secretary of Labor which is attached hereto and made a part hereof, regardless of any contractual relationship which may be alleged to exist between the Contractor and such laborers and mechanics. Contributions made or costs reasonably anticipated for bona fide fringe benefits under Section 1(b)(2) of the Davis-Bacon Act on behalf of laborers or mechanics are considered wages paid to such laborers or mechanics, subject to the provisions of 29 CFR 5.5(a)(1)(iv); also, regular contributions made or costs incurred for more than a weekly period (but not less often than quarterly) under plans, funds, or programs which cover the regular weekly period, are deemed to be constructively made or incurred during such weekly period. Such laborers and mechanics shall be paid the appropriate wage rate and fringe benefits in the wage determination for the classification of work actually performed, without regard to skill, except as provided in 29 CFR 5.5(a)(4). Laborers or mechanics performing work in more than one classification may be compensated at the rate specified for each classification for the time actually worked therein; provided, that the employer's payroll records accurately set forth the time spent in each classification in which work is performed. The wage determination (including any additional classification and wage rates conformed under 29 CFR 5.5(a)(1)(ii) and the Davis-Bacon poster (WH-1321) shall

be posted at all times by the Contractor and its subcontractors at the site of the work in a prominent and accessible place where it can be easily seen by the workers.

(2) (i) Any class of laborers or mechanics, including helpers, which is not listed in the wage determination and which is to be employed under the contract shall be classified in conformance with the wage determination. HUD shall approve an additional classification and wage rate and fringe benefits therefor only when all the following criteria have been met: (A) The work to be performed by the classification requested is not performed by a classification in the wage determination; and (B) The classification is utilized in the area by the construction industry; and (C) The proposed wage rate, including any bona fide fringe benefits, bears a reasonable relationship to the wage rates contained in the wage determination.

(ii) If the Contractor and the laborers and mechanics to be employed in the classification (if known), or their representatives, and HUD or its designee agree on the classification and wage rate (including the amount designated for fringe benefits where appropriate), a report of the action taken shall be sent by HUD or its designee to the Administrator of the Wage and Hour Division, Employee Standards Administration, U.S. Department of Labor, Washington, DC 20210. The Administrator, or an authorized representative, will approve, modify, or disapprove every additional classification action within 30 days of receipt and so advise HUD or its designee or will notify HUD or its designee within the 30-day period that additional time is necessary.

(iii) In the event the Contractor, the laborers or mechanics to be employed in the classification or their representatives, and HUD or its designee do not agree on the proposed classification and wage rate (including the amount designated for fringe benefits, where appropriate), HUD or its designee shall refer the questions, including the views of all interested parties and the recommendation of HUD or its designee, to the Administrator of the Wage and Hour Division for determination. The Administrator, or an authorized representative, will issue a determination within 30 days of receipt and so advise HUD or its designee or will notify HUD or its designee within the 30-day period that additional time is necessary.

(iv) The wage rate (including fringe benefits where appropriate) determined pursuant to subparagraphs (a)(2)(ii) or (iii) of this clause shall be paid to all workers performing work in the classification under this contract from the first day on which work is performed in classification.

(3) Whenever the minimum wage rate prescribed in the contract for a class of laborers or mechanics includes a fringe benefit which is not expressed as an hourly rate, the Contractor shall either pay the benefit as stated in the wage determination or shall pay another bona fide fringe benefit or an hourly cash equivalent thereof.

(4) If the Contractor does not make payments to a trustee or other third person, the Contractor may consider as part of the wages of any laborer or mechanic the amount of any costs reasonably anticipated in providing bona fide fringe benefits under a plan or program; provided, that the Secretary of Labor has found, upon the written request of the Contractor, that the applicable standards of the Davis-Bacon Act have been met. The Secretary of Labor may require the Contractor to set aside in a separate account assets for the meeting of obligations under the plan or program.

(b) Withholding of funds. HUD or its designee shall, upon its own action or upon written request of an authorized representative of the Department of Labor, withhold or cause to be withheld from the Contractor under this contract or any other Federal contract with the same prime Contractor, or any other Federally-assisted contract subject to Davis-Bacon prevailing wage requirements, which is held by the same prime Contractor, so much of the accrued payments or advances as may be considered necessary to pay laborers and mechanics, including apprentices, trainees, and helpers, employed by the Contractor or any subcontractor the full amount of wages required by the contract. In the event of failure to pay any laborer or mechanic, including any apprentice, trainee, or helper, employed or working in the construction or development of the project, all or part of the wages required by the contract, HUD or its designee may, after written notice to the Contractor, take such action as may be necessary to cause the suspension of any further payment, advance, or guarantee of funds until such violations have ceased. HUD or its designee may, after written notice to the Contractor, disburse such amounts withheld for and on account of the Contractor or subcontractor to the respective employees to whom they are due.

(c) Payrolls and basic records.

(1) Payrolls and basic records relating thereto shall be maintained by the Contractor during the course of the work and preserved for a period of three years thereafter for all laborers and mechanics working in the construction or development of the project. Such records shall contain the name, address, and social security number of each such worker, his or her correct classification, hourly rates of wages paid (including rates of contributions or costs anticipated for bona fide fringe benefits or cash equivalents thereof of the types described in section 1(b)(2)(B) of the Davis-Bacon Act), daily and weekly number of hours worked, deductions made, and actual wages paid. Whenever the Secretary of Labor has found, under 29 CFR 5.5(a)(1)(iv), that the wages of any laborer or mechanic include the amount of costs reasonably anticipated in providing benefits under a plan or program described in section 1(b)(2)(B) of the Davis-Bacon Act, the Contractor shall maintain records which show that the commitment to provide such benefits is enforceable, that the plan or program is financially responsible, and that the plan or program has been communicated in writing to the laborers or mechanics affected, and records which show the costs anticipated or the actual cost incurred in providing such benefits. Contractors employing apprentices or trainees under approved programs shall maintain written evidence of the registration of apprenticeship programs and certification of trainee programs, the registration of the apprentices and trainees, and the ratios and wage rates prescribed in the applicable programs.

(2) (i) The Contractor shall submit weekly for each week in which any contract work is performed a copy of all payrolls to the Contracting Officer for transmission to HUD or its designee. The payrolls submitted shall set out accurately and completely all of the information required to be maintained under subparagraph (c)(1) of this clause. This information may be submitted in any form desired. Optional Form WH-347 (Federal Stock Number 029-005-00014-1) is available for this purpose and may be purchased from the Superintendent of Documents, U.S. Government Printing Office, Washington, D.C. 20402. The Contractor is responsible for the submission of copies of payrolls by all subcontractors. (Approved by the Office of Management and Budget under OMB Control Number 1214-0149.)

(ii) Each payroll submitted shall be accompanied by a "Statement of Compliance," signed by the Contractor or subcontractor or his or her agent who pays or supervises the payment of the persons employed under the contract and shall certify the following:

(A) That the payroll for the payroll period contains the information required to be maintained under paragraph (c) (1) of this clause and that such information is correct and complete;

(B) That each laborer or mechanic (including each helper, apprentice, and trainee) employed on the contract during the payroll period has been paid the full weekly wages earned, without rebate, either directly or indirectly, and that no deductions have been made either directly or indirectly from the full wages earned, other than permissible deductions as set forth in 29 CFR Part 3; and

(C) That each laborer or mechanic has been paid not less than the applicable wage rates and fringe benefits or cash equivalents for the classification of work performed, as specified in the applicable wage determination incorporated into the contract.

(iii) The weekly submission of a properly executed certification set forth on the reverse side of Optional Form WH-347 shall satisfy the requirements for submission of the "Statement of Compliance" required by subparagraph (c)(2)(ii) of this clause.

(iv) The falsification of any of the above certifications may subject the Contractor or subcontractor to civil or criminal prosecution under Section 1001 of Title 18 and Section 3729 of Title 31 of the United States Code.

(3) The Contractor or subcontractor shall make the records required under subparagraph (c)(1) available for inspection, copying, or transcription by authorized representatives of HUD or its designee, the Contracting Officer, or the Department of Labor and shall permit such representatives to interview employees during working hours on the job. If the Contractor or subcontractor fails to submit the required records or to make them available, HUD or its designee may, after written notice to the Contractor, take such action as may be necessary to cause the suspension of any further payment, advance, or guarantee of funds. Furthermore, failure to submit the required records upon request or to make such records available may be grounds for debarment action pursuant to 29 CFR 5.12.

(d) (1) Apprentices. Apprentices will be permitted to work at less than the predetermined rate for the work they performed when they are employed pursuant to and individually registered in a bona fide apprenticeship program registered with the U.S. Department of Labor, Employment and Training Administration, Office of Apprenticeship and Training, Employer and Labor Services (OATELS), or with a State Apprenticeship Agency recognized by OATELS, or if a person is employed in his or her first 90 days of probationary employment as an apprentice in such an apprenticeship program, who is not individually registered in the program, but who has been certified by OATELS or a State Apprenticeship Agency (where appropriate) to be eligible for probationary employment as an apprentice. The allowable ratio of apprentices to journeymen on the job site in any craft classification shall not be greater than the ratio permitted to the Contractor as to the entire work force under the registered program. Any worker listed on a payroll at an apprentice wage rate, who is not registered or otherwise employed as stated in this paragraph, shall be paid not less than the applicable wage rate on the wage determination for the classification of work actually performed. In addition, any apprentice performing work on the job site in excess of the ratio permitted under the registered program shall be paid not less than the applicable wage rate on the wage determination for the work actually performed. Where a contractor is performing construction on a project in a locality other than that in which its program is registered, the ratios and wage rates (expressed in percentages of the journeyman's hourly rate) specified in the Contractor's or subcontractor's registered program shall be observed. Every apprentice must be paid at not less than the rate specified in the registered program for the apprentice's level of progress, expressed as a percentage of the journeyman hourly rate specified in the applicable wage determination. Apprentices shall be paid fringe benefits in accordance with the provisions of the apprenticeship program. If the apprenticeship program does not specify fringe benefits, apprentices must be paid the full amount of fringe benefits listed on the wage determination for the applicable classification. If the Administrator of the Wage and Hour Division determines that a different practice prevails for the applicable apprentice classification, fringes shall be paid in accordance with that determination. In the event OATELS, or a State Apprenticeship Agency recognized by OATELS, withdraws approval of an apprenticeship program, the Contractor will no longer be permitted to utilize apprentices at less than the applicable predetermined rate for the work performed until an acceptable program is approved.

(2) Trainees. Except as provided in 29 CFR 5.16, trainees will not be permitted to work at less than the predetermined rate for the work performed unless they are employed pursuant to and individually registered in a program which has received prior approval, evidenced by formal certification by the U.S. Department of Labor, Employment and Training Administration. The ratio of trainees to journeymen on the job site shall not be greater than permitted under

the plan approved by the Employment and Training Administration. Every trainee must be paid at not less than the rate specified in the approved program for the trainee's level of progress, expressed as a percentage of the journeyman hourly rate specified in the applicable wage determination. Trainees shall be paid fringe benefits in accordance with the provisions of the trainee program. If the trainee program does not mention fringe benefits, trainees shall be paid the full amount of fringe benefits listed in the wage determination unless the Administrator of the Wage and Hour Division determines that there is an apprenticeship program associated with the corresponding journeyman wage rate in the wage determination which provides for less than full fringe benefits for apprentices. Any employee listed on the payroll at a trainee rate who is not registered and participating in a training plan approved by the Employment and Training Administration shall be paid not less than the applicable wage rate in the wage determination for the classification of work actually performed. In addition, any trainee performing work on the job site in excess of the ratio permitted under the registered program shall be paid not less than the applicable wage rate in the wage determination for the work actually performed. In the event the Employment and Training Administration withdraws approval of a training program, the Contractor will no longer be permitted to utilize trainees at less than the applicable predetermined rate for the work performed until an acceptable program is approved.

(3) Equal employment opportunity. The utilization of apprentices, trainees, and journeymen under this clause shall be in conformity with the equal employment opportunity requirements of Executive Order 11246, as amended, and 29 CFR Part 30.

(e) Compliance with Copeland Act requirements. The Contractor shall comply with the requirements of 29 CFR Part 3, which are hereby incorporated by reference in this contract.

(f) Contract termination; debarment. A breach of this contract clause may be grounds for termination of the contract and for debarment as a Contractor and a subcontractor as provided in 29 CFR 5.12.

(g) Compliance with Davis-Bacon and related Act requirements. All rulings and interpretations of the Davis-Bacon and related Acts contained in 29 CFR Parts 1, 3, and 5 are herein incorporated by reference in this contract.

(h) Disputes concerning labor standards. Disputes arising out of the labor standards provisions of this clause shall not be subject to the general disputes clause of this contract. Such disputes shall be resolved in accordance with the procedures of the Department of Labor set forth in 29 CFR Parts 5, 6, and 7. Disputes within the meaning of this clause include disputes between the Contractor (or any of its subcontractors) and the PHA, HUD, the U.S. Department of Labor, or the employees or their representatives.

(i) Certification of eligibility.

(1) By entering into this contract, the Contractor certifies that neither it (nor he or she) nor any person or firm who has an interest in the Contractor's firm is a person or firm ineligible to be awarded contracts by the United States Government by virtue of section 3(a) of the Davis-Bacon Act or 29 CFR 5.12(a)(1).

(2) No part of this contract shall be subcontracted to any person or firm ineligible for award of a United States Government contract by virtue of section 3(a) of the Davis-Bacon Act or 29 CFR 5.12(a)(1).

(3) The penalty for making false statements is prescribed in the U. S. Criminal Code, 18 U.S.C. 1001.

(j) Contract Work Hours and Safety Standards Act. As used in this paragraph, the terms "laborers" and "mechanics" include watchmen and guards.

(1) Overtime requirements. No contractor or subcontractor contracting for any part of the contract work which may require or involve the employment of laborers or mechanics, including watchmen and guards, shall require or permit any such laborer or mechanic in any workweek in which the individual is employed on such work to work in excess of 40 hours in such workweek unless such laborer or mechanic receives compensation at a rate not less than one and one-half times the basic rate of pay for all hours worked in excess of 40 hours in such workweek.

(2) Violation; liability for unpaid wages; liquidated damages. In the event of any violation of the provisions set forth in subparagraph (j)(1) of this clause, the Contractor and any subcontractor responsible therefor shall be liable for the unpaid wages. In addition, such Contractor and subcontractor shall be liable to the United States (in the case of work done under contract for the District of Columbia or a territory, to such District or to such territory), for liquidated damages. Such liquidated damages shall be computed with respect to each individual laborer or mechanic (including watchmen and guards) employed in violation of the provisions set forth in subparagraph (j)(1) of this clause, in the sum of $27 for each calendar day on which such individual was required or permitted to work in excess of the standard workweek of 40 hours without payment of the overtime wages required by provisions set forth in subparagraph (j)(1) of this clause. DOL posts current fines at: https://www.dol.gov/whd/govcontracts/cwhssa.htm#cmp

(3) Withholding for unpaid wages and liquidated damages. HUD or its designee shall upon its own action or upon written request of an authorized representative of the Department of Labor withhold or cause to be withheld, from any moneys payable on account of work performed by the Contractor or subcontractor under any such contract or any Federal contract with the same prime Contractor, or any other Federally-assisted contract subject to the Contract Work Hours and Safety Standards Act, which is held by the same prime Contractor, such sums as may be determined to be necessary to satisfy any liabilities of such Contractor or subcontractor for unpaid wages and liquidated damages as provided in the provisions set forth in subparagraph (j)(2) of this clause.

(k) Subcontracts. The Contractor or subcontractor shall insert in any subcontracts all the provisions contained in this clause, and such other clauses as HUD or its designee may by appropriate instructions require, and also a clause requiring the subcontractors to include these provisions in any lower tier subcontracts. The prime Contractor shall be responsible for the compliance by any subcontractor or lower tier subcontractor with all these provisions.

47. Non-Federal Prevailing Wage Rates

(a) Any prevailing wage rate (including basic hourly rate and any fringe benefits), determined under State or tribal law to be prevailing, with respect to any employee in any trade or position employed under the contract, is inapplicable to the contract and shall not be enforced against the Contractor or any subcontractor, with respect to employees engaged under the contract whenever such non-Federal prevailing wage rate exceeds:

(1) The applicable wage rate determined by the Secretary of Labor pursuant to the Davis-Bacon Act (40 U.S.C. 3141 et seq.) to be prevailing in the locality with respect to such trade;

(b) An applicable apprentice wage rate based thereon specified in an apprenticeship program registered with the U.S. Department of Labor (DOL) or a DOL-recognized State Apprenticeship Agency; or

(c) An applicable trainee wage rate based thereon specified in a DOL-certified trainee program.

48. Procurement of Recovered Materials.

(a) In accordance with Section 6002 of the Solid Waste Disposal Act, as amended by the Resource Conservation and Recovery Act, the Contractor shall procure items designated in guidelines of the Environmental Protection Agency (EPA) at 40 CFR Part 247 that contain the highest percentage of recovered materials practicable, consistent with maintaining a satisfactory level of competition. The Contractor shall procure items designated in the EPA guidelines that contain the highest percentage of recovered materials practicable unless the Contractor determines that such items: (1) are not reasonably available in a reasonable period of time; (2) fail to meet reasonable performance standards, which shall be determined on the basis of the guidelines of the National Institute of Standards and Technology, if applicable to the item; or (3) are only available at an unreasonable price.

( ) Paragraph (a) of this clause shall apply to items purchased under this contract where: (1) the Contractor purchases in excess of $10,000 of the item under this contract; or (2) during the preceding Federal fiscal year, the Contractor: (i) purchased any amount of the items for use under a contract that was funded with Federal appropriations and was with a Federal agency or a State agency or agency of a political subdivision of a State; and (ii) purchased a total of in excess of $10,000 of the item both under and outside that contract.

DocuSign Envelope ID: FC20CC1D-27CE-4697-B47D-B02636483E86

EXHIBIT F

INSURANCE REQUIREMENTS

General Requirements

(i) During the performance of the work and until its acceptance by Authority, Contractor and each Subcontractor shall maintain in full force public liability and property damage insurance in accordance with this Exhibit F.

(ii) Before commencing work, Contractor and each of its Subcontractors shall furnish Authority with a Certificate of Insurance, in triplicate (naming the Housing Authority of the City of Alameda as the Certificate Holder) indicating insurance coverage with respect to the liability assumed under the provisions of this Exhibit F, and shall further indicate the insurance coverage is in force and will cover all operations under the contract with minimum limits as shown below:

Contractor

(1) Workers' Compensation Insurance that meets statutory limits and Employer's Liability limit at not less than One Million and No/100ths Dollars ($1,000,000.00) per occurrence.

(2) Commercial General Liability including Blanket Contractual Liability, Employees as Additional Insured, Completed Operations-Products Liability, and deletion of any exclusion pertaining to explosion, collapse, and underground property damage hazards, Personal Injury Liability endorsement, Property Damage Liability including Broad Form Property Damage endorsement.

The minimum limits of liability shall be:

Contractor:

$2,000,000	Combined Single Limit per Occurrence Bodily Injury and Property Damage
$2,000,000	General Aggregate Limit
$2,000,000	Products and Completed Operations Aggregate

Products and Completed Operations Insurance shall be maintained for a minimum period of two (2) years after final payment, and contractor shall continue to furnish evidence of such coverage to Authority on an annual basis during the aforementioned period.

Liability Insurance shall be written to cover all claims incurred during the term of this Agreement or out of any work performed pursuant to this Agreement, regardless of when such claim shall be first made against Authority and/or Contractor. Should any required liability

DocuSign Envelope ID: FC20CC1D-27CE-4697-B47D-B02636483E86

insurance be written on a claims-made basis, Contractor shall continue to provide such evidence of coverage for four (4) years after completion and acceptance of the Project.

(3) Comprehensive Automobile Liability Insurance applicable to any owned, non-owned or hired vehicles in limits not less than the following:

Two Million and No/100ths Dollars ($2,000,000.00) per occurrence Combined Single Limit of Bodily Injury and Property Damage Liability.

The limits required in numbers 2 and 3 above may be satisfied through any combination of limits under primary liability and automobile liability policies and excess/umbrella liability policies.

Subcontractors

Contractor shall require that all Subcontractors maintain and provide evidence of insurance as follows:

Commercial General Liability:

Bodily Injury & Property Damage:	$1,000,000 per occurrence;
Personal Injury:	$1,000,000;
General Aggregate:	$2,000,000;
Products/Completed Operations Aggregate:	$1,000,000;
Automobile Bodily Injury and Property Damage Liability:	$1,000,000 per occurrence; and
Workers' Compensation Statutory Employers' Liability	$1,000,000.

With the exception of Workers' Compensation insurance, each policy shall be endorsed to include Authority and Contractor as additional insureds, and shall also provide the following:

All liability policies shall be endorsed to state that the Subcontractor's coverage shall be considered primary and non-contributory, and that any liability insurance carried by Authority or Contractor shall be considered excess.

All policies of insurance required of the Subcontractor shall be endorsed to state that the insurer will provide Authority and Contractor with a thirty (30)-calendar day notice of cancellation or non-renewal. Prior to the time of commencement of the subcontract, Subcontractors shall be required to deliver to Contractor certificates providing evidence of the insurance required under this provision, along with copies of the endorsements required above.

Hazardous Materials: Contractor shall require the hazardous materials removal subcontractor(s) to provide insurance for liability arising out of removal and disposal of all

DocuSign Envelope ID: FC20CC1D-27CE-4697-B47D-B02636483E86

hazardous materials from the Property. Such insurance shall be for the minimum limits of One Million and No/100ths Dollars ($1,000,000.00) per occurrence and Two Million and No/100ths Dollars ($2,000,000.00) in the aggregate, and shall name the Housing Authority of the City of Alameda and Contractor as additional insureds. The limits required in this Paragraph B may be satisfied by any combination of primary and excess/umbrella policies.

Contractor shall take responsible steps to insure that each of the Subcontracts and subordinate subcontractors assist and cooperate in every manner possible in connection with the adjustment of all claims arising out of operations within the scope of work provided for under the Contract, and shall cooperate with the insurer in all litigated claims and demands or defense which the insurer is called upon to adjust or resist which arise out of said work.

Proof of the above insurance policies furnished at Contractor's expense, and applicable to all operations under the Contract, must be provided to Authority prior to commencement of work under a Contract. Coverage shall be placed with insurance companies with A.M. Best Co.'s rating of no less than A-VII. The policy must name Authority as an additional insured and the consultant must provide Authority with Certificates of Insurance for the preceding coverage's. The insurance policies must provide a thirty (30)-calendar day notice of cancellation and be primary to any other insurance carried by Authority.

DocuSign Envelope ID: FC20CC1D-27CE-4697-B47D-B02636483E86

EXHIBIT G

DAVIS BACON WAGE RATES

[See Attached]

REMAINDER OF THIS PAGE LEFT INTENTIONALLY BLANK

DocuSign Envelope ID: FC20CC1D-27CE-4697-B47D-B02636483E86

EXHIBIT H

AHA SECTION 3 POLICY

[See Attached]

REMAINDER OF THIS PAGE LEFT INTENTIONALLY BLANK

DocuSign Envelope ID: FC20CC1D-27CE-4697-B47D-B02636483E86

EXHIBIT I

SECTION 3 CERTIFICATION

[See Attached]

REMAINDER OF THIS PAGE LEFT INTENTIONALLY BLANK

DocuSign Envelope ID: FC20CC1D-27CE-4697-B47D-B02636483E86

EXHIBIT J

NOTICE FOR AFFIRMATIVE ACTION TO ENSURE EQUAL EMPLOYMENT OPPORTUNITY UNDER EXECUTIVE ORDER 11246, AND THE STANDARD FEDERAL EQUAL EMPLOYMENT OPPORTUNITY CONSTRUCTION CONTRACT SPECIFICATIONS

[See Attached]

REMAINDER OF THIS PAGE LEFT INTENTIONALLY BLANK

DocuSign Envelope ID: FC20CC1D-27CE-4697-B47D-B02636483E86

Executive Order 11246, As Amended

Executive Order 11246 — Equal Employment Opportunity

SOURCE: The provisions of Executive Order 11246 of Sept. 24, 1965, appear at 30 FR 12319, 12935, 3 CFR, 1964–1965 Comp., p.339, unless otherwise noted.

Under and by virtue of the authority vested in me as President of the United States by the Constitution and statutes of the United States, it is ordered as follows:

Part I — Nondiscrimination in Government Employment

[Part I superseded by EO 11478 of Aug. 8, 1969, 34 FR 12985, 3 CFR, 1966–1970 Comp., p. 803]

Part II - Nondiscrimination in Employment by Government Contractors and Subcontractors

Subpart A – Duties of the Secretary of Labor

SEC. 201

The Secretary of Labor shall be responsible for the administration and enforcement of Parts II and III of this Order. The Secretary shall adopt such rules and regulations and issue such orders as are deemed necessary and appropriate to achieve the purposes of Parts II and III of this Order.

[Sec. 201 amended by EO 12086 of Oct. 5, 1978, 43 FR 46501, 3 CFR, l978 Comp., p. 230]

Subpart B – Contractors' Agreements

SEC. 202

Except in contracts exempted in accordance with Section 204 of this Order, all Government contracting agencies shall include in every Government contract hereafter entered into the following provisions:

During the performance of this contract, the contractor agrees as follows:

DocuSign Envelope ID: FC20CC1D-27CE-4697-B47D-B02636483E86

1. The contractor will not discriminate against any employee or applicant for employment because of race, color, religion, sex, sexual orientation, gender identity, or national origin. The contractor will take affirmative action to ensure that applicants are employed, and that employees are treated during employment, without regard to their race, color, religion, sex, sexual orientation, gender identity, or national origin. Such action shall include, but not be limited to the following: employment, upgrading, demotion, or transfer; recruitment or recruitment advertising; layoff or termination; rates of pay or other forms of compensation; and selection for training, including apprenticeship. The contractor agrees to post in conspicuous places, available to employees and applicants for employment, notices to be provided by the contracting officer setting forth the provisions of this nondiscrimination clause.
2. The contractor will, in all solicitations or advancements for employees placed by or on behalf of the contractor, state that all qualified applicants will receive consideration for employment without regard to race, color, religion, sex, sexual orientation, gender identity, or national origin.
3. The contractor will not discharge or in any other manner discriminate against any employee or applicant for employment because such employee or applicant has inquired about, discussed, or disclosed the compensation of the employee or applicant or another employee or applicant. This provision shall not apply to instances in which an employee who has access to the compensation information of other employees or applicants as a part of such employee's essential job functions discloses the compensation of such other employees or applicants to individuals who do not otherwise have access to such information, unless such disclosure is in response to a formal complaint or charge, in furtherance of an investigation, proceeding, hearing, or action, including an investigation conducted by the employer, or is consistent with the contractor's legal duty to furnish information.
4. The contractor will send to each labor union or representative of workers with which he has a collective bargaining agreement or other contract or understanding, a notice, to be provided by the agency contracting officer, advising the labor union or workers' representative of the contractor's commitments under Section 202 of Executive Order No. 11246 of September 24, 1965, and shall post copies of the notice in conspicuous places available to employees and applicants for employment.

DocuSign Envelope ID: FC20CC1D-27CE-4697-B47D-B02636483E86

5. The contractor will comply with all provisions of Executive Order No. 11246 of Sept. 24, 1965, and of the rules, regulations, and relevant orders of the Secretary of Labor.
6. The contractor will furnish all information and reports required by Executive Order No. 11246 of September 24, 1965, and by the rules, regulations, and orders of the Secretary of Labor, or pursuant thereto, and will permit access to his books, records, and accounts by the contracting agency and the Secretary of Labor for purposes of investigation to ascertain compliance with such rules, regulations, and orders.
7. In the event of the contractor's noncompliance with the nondiscrimination clauses of this contract or with any of such rules, regulations, or orders, this contract may be cancelled, terminated, or suspended in whole or in part and the contractor may be declared ineligible for further Government contracts in accordance with procedures authorized in Executive Order No. 11246 of Sept. 24, 1965, and such other sanctions may be imposed and remedies invoked as provided in Executive Order No. 11246 of September 24, 1965, or by rule, regulation, or order of the Secretary of Labor, or as otherwise provided by law.
8. The contractor will include the provisions of paragraphs (1) through (8) in every subcontract or purchase order unless exempted by rules, regulations, or orders of the Secretary of Labor issued pursuant to Section 204 of Executive Order No. 11246 of September 24, 1965, so that such provisions will be binding upon each subcontractor or vendor. The contractor will take such action with respect to any subcontract or purchase order as may be directed by the Secretary of Labor as a means of enforcing such provisions including sanctions for noncompliance: Provided, however, that in the event the contractor becomes involved in, or is threatened with, litigation with a subcontractor or vendor as a result of such direction, the contractor may request the United States to enter into such litigation to protect the interests of the United States. [Sec. 202 amended by EO 11375 of Oct. 13, 1967, 32 FR 14303, 3 CFR, 1966–1970 Comp., p. 684, EO 12086 of Oct. 5, 1978, 43 FR 46501, 3 CFR, 1978 Comp., p. 230, EO 13665 of April 8, 2014, 79 FR 20749, EO 13672 of July 21, 2014, 79 FR 42971]

SEC. 203

a. Each contractor having a contract containing the provisions prescribed in Section 202 shall file, and shall cause each of his subcontractors to file, Compliance Reports with the contracting agency or the Secretary of Labor as may be directed. Compliance

DocuSign Envelope ID: FC20CC1D-27CE-4697-B47D-B02636483E86

Reports shall be filed within such times and shall contain such information as to the practices, policies, programs, and employment policies, programs, and employment statistics of the contractor and each subcontractor, and shall be in such form, as the Secretary of Labor may prescribe.

b. Bidders or prospective contractors or subcontractors may be required to state whether they have participated in any previous contract subject to the provisions of this Order, or any preceding similar Executive order, and in that event to submit, on behalf of themselves and their proposed subcontractors, Compliance Reports prior to or as an initial part of their bid or negotiation of a contract.

c. Whenever the contractor or subcontractor has a collective bargaining agreement or other contract or understanding with a labor union or an agency referring workers or providing or supervising apprenticeship or training for such workers, the Compliance Report shall include such information as to such labor union's or agency's practices and policies affecting compliance as the Secretary of Labor may prescribe: Provided, that to the extent such information is within the exclusive possession of a labor union or an agency referring workers or providing or supervising apprenticeship or training and such labor union or agency shall refuse to furnish such information to the contractor, the contractor shall so certify to the Secretary of Labor as part of its Compliance Report and shall set forth what efforts he has made to obtain such information.

d. The Secretary of Labor may direct that any bidder or prospective contractor or subcontractor shall submit, as part of his Compliance Report, a statement in writing, signed by an authorized officer or agent on behalf of any labor union or any agency referring workers or providing or supervising apprenticeship or other training, with which the bidder or prospective contractor deals, with supporting information, to the effect that the signer's practices and policies do not discriminate on the grounds of race, color, religion, sex, sexual orientation, gender identity, or national origin, and that the signer either will affirmatively cooperate in the implementation of the policy and provisions of this Order or that it consents and agrees that recruitment, employment, and the terms and conditions of employment under the proposed contract shall be in accordance with the purposes and provisions of the order. In the event that the union, or the agency shall refuse to execute such a statement, the Compliance Report shall so certify and set forth

DocuSign Envelope ID: FC20CC1D-27CE-4697-B47D-B02636483E86

what efforts have been made to secure such a statement and such additional factual material as the Secretary of Labor may require.

[Sec. 203 amended by EO 11375 of Oct. 13, 1967, 32 FR 14303, 3 CFR, 1966–1970 Comp., p. 684; EO 12086 of Oct. 5, 1978, 43 FR 46501, 3 CFR, 1978 Comp., p. 230, EO 13672 of July 21, 2104, 79 FR 42971]

SEC. 204

a. The Secretary of Labor may, when the Secretary deems that special circumstances in the national interest so require, exempt a contracting agency from the requirement of including any or all of the provisions of Section 202 of this **Order** in any specific contract, subcontract, or purchase **order**.

b. The Secretary of Labor may, by rule or regulation, exempt certain classes of contracts, subcontracts, or purchase orders (1) whenever work is to be or has been performed outside the United States and no recruitment of workers within the limits of the United States is involved; (2) for standard commercial supplies or raw materials; (3) involving less than specified amounts of money or specified numbers of workers; or (4) to the extent that they involve subcontracts below a specified tier.

c. Section 202 of this **Order** shall not apply to a Government contractor or subcontractor that is a religious corporation, association, educational institution, or society, with respect to the employment of individuals of a particular religion to perform work connected with the carrying on by such corporation, association, educational institution, or society of its activities. Such contractors and subcontractors are not exempted or excused from complying with the other requirements contained in this **Order**.

d. The Secretary of Labor may also provide, by rule, regulation, or order, for the exemption of facilities of a contractor that are in all respects separate and distinct from activities of the contractor related to the performance of the contract: provided, that such an exemption will not interfere with or impede the effectuation of the purposes of this **Order**: and provided further, that in the absence of such an exemption all facilities shall be covered by the provisions of this **Order**.

[Sec. 204 amended by EO 13279 of Dec. 16, 2002, 67 FR 77141, 3 CFR, 2002 Comp., p. 77141 – 77144]

DocuSign Envelope ID: FC20CC1D-27CE-4697-B47D-B02636483E86

Subpart C – Powers and Duties of the Secretary of Labor and the Contracting Agencies

SEC. 205

The Secretary of Labor shall be responsible for securing compliance by all Government contractors and subcontractors with this Order and any implementing rules or regulations. All contracting agencies shall comply with the terms of this Order and any implementing rules, regulations, or orders of the Secretary of Labor. Contracting agencies shall cooperate with the Secretary of Labor and shall furnish such information and assistance as the Secretary may require.

[Sec. 205 amended by EO 12086 of Oct. 5, 1978, 43 FR 46501, 3 CFR, 1978 Comp., p. 230]

SEC. 206

a. The Secretary of Labor may investigate the employment practices of any Government contractor or subcontractor to determine whether or not the contractual provisions specified in Section 202 of this Order have been violated. Such investigation shall be conducted in accordance with the procedures established by the Secretary of Labor.

b. The Secretary of Labor may receive and investigate complaints by employees or prospective employees of a Government contractor or subcontractor which allege discrimination contrary to the contractual provisions specified in Section 202 of this Order.

[Sec. 206 amended by EO 12086 of Oct. 5, 1978, 43 FR 46501, 3 CFR, 1978 Comp., p. 230]

SEC. 207

The Secretary of Labor shall use his/her best efforts, directly and through interested Federal, State, and local agencies, contractors, and all other available instrumentalities to cause any labor union engaged in work under Government contracts or any agency referring workers or providing or supervising apprenticeship or training for or in the course of such work to cooperate in the implementation of the purposes of this Order. The Secretary of Labor shall, in appropriate cases, notify the Equal Employment Opportunity Commission, the Department of Justice, or other appropriate Federal agencies whenever it has reason to believe that the practices of any such labor organization or agency violate Title VI or Title VII of the Civil Rights Act of 1964 or other provision of Federal law.

[Sec. 207 amended by EO 12086 of Oct. 5, 1978, 43 FR 46501, 3 CFR, 1978 Comp., p. 230]

SEC. 208

a. The Secretary of Labor, or any agency, officer, or employee in the executive branch of the Government designated by rule, regulation, or order of the Secretary, may hold such

DocuSign Envelope ID: FC20CC1D-27CE-4697-B47D-B02636483E86

hearings, public or private, as the Secretary may deem advisable for compliance, enforcement, or educational purposes.

b. The Secretary of Labor may hold, or cause to be held, hearings in accordance with Subsection of this Section prior to imposing, ordering, or recommending the imposition of penalties and sanctions under this Order. No order for debarment of any contractor from further Government contracts under Section 209(6) shall be made without affording the contractor an opportunity for a hearing.

Subpart D – Sanctions and Penalties

SEC. 209

In accordance with such rules, regulations, or orders as the Secretary of Labor may issue or adopt, the Secretary may:

1. Publish, or cause to be published, the names of contractors or unions which it has concluded have complied or have failed to comply with the provisions of this Order or of the rules, regulations, and orders of the Secretary of Labor.
2. Recommend to the Department of Justice that, in cases in which there is substantial or material violation or the threat of substantial or material violation of the contractual provisions set forth in Section 202 of this Order, appropriate proceedings be brought to enforce those provisions, including the enjoining, within the limitations of applicable law, of organizations, individuals, or groups who prevent directly or indirectly, or seek to prevent directly or indirectly, compliance with the provisions of this Order.
3. Recommend to the Equal Employment Opportunity Commission or the Department of Justice that appropriate proceedings be instituted under Title VII of the Civil Rights Act of 1964.
4. Recommend to the Department of Justice that criminal proceedings be brought for the furnishing of false information to any contracting agency or to the Secretary of Labor as the case may be.
5. After consulting with the contracting agency, direct the contracting agency to cancel, terminate, suspend, or cause to be cancelled, terminated, or suspended, any contract, or any portion or portions thereof, for failure of the contractor or subcontractor to comply with equal employment opportunity provisions of the contract. Contracts may be

DocuSign Envelope ID: FC20CC1D-27CE-4697-B47D-B02636483E86

cancelled, terminated, or suspended absolutely or continuance of contracts may be conditioned upon a program for future compliance approved by the Secretary of Labor.

6. Provide that any contracting agency shall refrain from entering into further contracts, or extensions or other modifications of existing contracts, with any noncomplying contractor, until such contractor has satisfied the Secretary of Labor that such contractor has established and will carry out personnel and employment policies in compliance with the provisions of this Order.

(b) Pursuant to rules and regulations prescribed by the Secretary of Labor, the Secretary shall make reasonable efforts, within a reasonable time limitation, to secure compliance with the contract provisions of this Order by methods of conference, conciliation, mediation, and persuasion before proceedings shall be instituted under subsection (a)(2) of this Section, or before a contract shall be cancelled or terminated in whole or in part under subsection (a)(5) of this Section.

[Sec. 209 amended by EO 12086 of Oct. 5, 1978, 43 FR 46501, 3 CFR, 1978 Comp., p. 230]

SEC. 210

Whenever the Secretary of Labor makes a determination under Section 209, the Secretary shall promptly notify the appropriate agency. The agency shall take the action directed by the Secretary and shall report the results of the action it has taken to the Secretary of Labor within such time as the Secretary shall specify. If the contracting agency fails to take the action directed within thirty days, the Secretary may take the action directly.

[Sec. 210 amended by EO 12086 of Oct. 5, 1978, 43 FR 46501, 3 CFR, 1978 Comp., p 230]

SEC. 211

If the Secretary shall so direct, contracting agencies shall not enter into contracts with any bidder or prospective contractor unless the bidder or prospective contractor has satisfactorily complied with the provisions of this Order or submits a program for compliance acceptable to the Secretary of Labor.

[Sec. 211 amended by EO 12086 of Oct. 5, 1978, 43 FR 46501, 3 CFR, 1978 Comp., p. 230]

SEC. 212

When a contract has been cancelled or terminated under Section 209(a)(5) or a contractor has been debarred from further Government contracts under Section 209(a)(6) of this Order, because of noncompliance with the contract provisions specified in Section 202 of this Order, the Secretary of Labor shall promptly notify the Comptroller General of the United States.

[Sec. 212 amended by EO 12086 of Oct. 5, 1978, 43 FR 46501, 3 CFR, 1978 Comp., p. 230]

Subpart E – Certificates of Merit

SEC. 213

DocuSign Envelope ID: FC20CC1D-27CE-4697-B47D-B02636483E86

The Secretary of Labor may provide for issuance of a United States Government Certificate of Merit to employers or labor unions, or other agencies which are or may hereafter be engaged in work under Government contracts, if the Secretary is satisfied that the personnel and employment practices of the employer, or that the personnel, training, apprenticeship, membership, grievance and representation, upgrading, and other practices and policies of the labor union or other agency conform to the purposes and provisions of this Order.

SEC. 214

Any Certificate of Merit may at any time be suspended or revoked by the Secretary of Labor if the holder thereof, in the judgment of the Secretary, has failed to comply with the provisions of this Order.

SEC. 215

The Secretary of Labor may provide for the exemption of any employer, labor union, or other agency from any reporting requirements imposed under or pursuant to this Order if such employer, labor union, or other agency has been awarded a Certificate of Merit which has not been suspended or revoked.

Part III – Nondiscrimination Provisions in Federally Assisted Construction Contracts

SEC. 301

Each executive department and agency, which administers a program involving Federal financial assistance shall require as a condition for the approval of any grant, contract, loan, insurance, or guarantee thereunder, which may involve a construction contract, that the applicant for Federal assistance undertake and agree to incorporate, or cause to be incorporated, into all construction contracts paid for in whole or in part with funds obtained from the Federal Government or borrowed on the credit of the Federal Government pursuant to such grant, contract, loan, insurance, or guarantee, or undertaken pursuant to any Federal program involving such grant, contract, loan, insurance, or guarantee, the provisions prescribed for Government contracts by Section 202 of this Order or such modification thereof, preserving in substance the contractor's obligations thereunder, as may be approved by the Secretary of Labor, together with such additional provisions as the Secretary deems appropriate to establish and protect the interest of the United States in the enforcement of those obligations. Each such applicant shall also undertake and agree (1) to assist and cooperate actively with the Secretary of Labor in obtaining the compliance of contractors and subcontractors with those contract provisions and with the rules, regulations and relevant orders of the Secretary, (2) to obtain and to furnish to the Secretary of Labor such information as the Secretary may require for the supervision of such compliance, (3) to carry out sanctions and penalties for violation of such obligations imposed upon contractors and subcontractors by the Secretary of Labor pursuant to Part II, Subpart D, of this Order, and (4) to refrain from entering into any contract subject to this Order, or extension or other modification of such a contract with a contractor debarred from Government contracts under Part II, Subpart D, of this Order.

[Sec. 301 amended by EO 12086 of Oct. 5, 1978, 43 FR 46501, 3 CFR, 1978 Comp., p. 230]

SEC. 302

DocuSign Envelope ID: FC20CC1D-27CE-4697-B47D-B02636483E86

a. “Construction contract” as used in this Order means any contract for the construction, rehabilitation, alteration, conversion, extension, or repair of buildings, highways, or other improvements to real property.

b. The provisions of Part II of this Order shall apply to such construction contracts, and for purposes of such application the administering department or agency shall be considered the contracting agency referred to therein.

c. The term “applicant” as used in this Order means an applicant for Federal assistance or, as determined by agency regulation, other program participant, with respect to whom an application for any grant, contract, loan, insurance, or guarantee is not finally acted upon prior to the effective date of this Part, and it includes such an applicant after he/she becomes a recipient of such Federal assistance.

SEC. 303

a. The Secretary of Labor shall be responsible for obtaining the compliance of such applicants with their undertakings under this Order. Each administering department and agency is directed to cooperate with the Secretary of Labor and to furnish the Secretary such information and assistance as the Secretary may require in the performance of the Secretary’s functions under this Order.

b. In the event an applicant fails and refuses to comply with the applicant’s undertakings pursuant to this Order, the Secretary of Labor may, after consulting with the administering department or agency, take any or all of the following actions: (1) direct any administering department or agency to cancel, terminate, or suspend in whole or in part the agreement, contract or other arrangement with such applicant with respect to which the failure or refusal occurred; (2) direct any administering department or agency to refrain from extending any further assistance to the applicant under the program with respect to which the failure or refusal occurred until satisfactory assurance of future compliance has been received by the Secretary of Labor from such applicant; and (3) refer the case to the Department of Justice or the Equal Employment Opportunity Commission for appropriate law enforcement or other proceedings.

c. In no case shall action be taken with respect to an applicant pursuant to clause (1) or (2) of subsection (b) without notice and opportunity for hearing.

[Sec. 303 amended by EO 12086 of Oct. 5, 1978, 43 FR 46501, 3 CFR, 1978 Comp., p. 230]

DocuSign Envelope ID: FC20CC1D-27CE-4697-B47D-B02636483E86

SEC. 304

Any executive department or agency which imposes by rule, regulation, or order requirements of nondiscrimination in employment, other than requirements imposed pursuant to this Order, may delegate to the Secretary of Labor by agreement such responsibilities with respect to compliance standards, reports, and procedures as would tend to bring the administration of such requirements into conformity with the administration of requirements imposed under this Order: Provided, That actions to effect compliance by recipients of Federal financial assistance with requirements imposed pursuant to Title VI of the Civil Rights Act of 1964 shall be taken in conformity with the procedures and limitations prescribed in Section 602 thereof and the regulations of the administering department or agency issued thereunder.

Part IV – Miscellaneous

SEC. 401

The Secretary of Labor may delegate to any officer, agency, or employee in the Executive branch of the Government, any function or duty of the Secretary under Parts II and III of this Order.

[Sec. 401 amended by EO 12086 of Oct. 5, l978, 43 FR 46501, 3 CFR, 1978 Comp., p. 230]

SEC. 402

The Secretary of Labor shall provide administrative support for the execution of the program known as the “Plans for Progress.”

SEC. 403

a. Executive Orders Nos. 10590 (January 19, 1955), 10722 (August 5, 1957), 10925 (March 6, 1961), 11114 (June 22, 1963), and 11162 (July 28, 1964), are hereby superseded and the President’s Committee on Equal Employment Opportunity established by Executive Order No. 10925 is hereby abolished. All records and property in the custody of the Committee shall be transferred to the Office of Personnel Management and the Secretary of Labor, as appropriate.

b. Nothing in this Order shall be deemed to relieve any person of any obligation assumed or imposed under or pursuant to any Executive Order superseded by this Order. All rules, regulations, orders, instructions, designations, and other directives issued by the President’s Committee on Equal Employment Opportunity and those issued by the heads of various departments or agencies under or pursuant to any of the Executive orders superseded by this Order, shall, to the extent that they are not inconsistent with

DocuSign Envelope ID: FC20CC1D-27CE-4697-B47D-B02636483E86

this Order, remain in full force and effect unless and until revoked or superseded by appropriate authority. References in such directives to provisions of the superseded orders shall be deemed to be references to the comparable provisions of this Order.

[Sec. 403 amended by EO 12107 of Dec. 28, 1978, 44 FR 1055, 3 CFR, 1978 Comp., p, 264]

SEC. 404

The General Services Administration shall take appropriate action to revise the standard Government contract forms to accord with the provisions of this Order and of the rules and regulations of the Secretary of Labor.

SEC. 405

This Order shall become effective thirty days after the date of this Order.

DocuSign Envelope ID: FC20CC1D-27CE-4697-B47D-B02636483E86

EXHIBIT K

SCHEDULE

[See Attached]

REMAINDER OF THIS PAGE LEFT INTENTIONALLY BLANK

DocuSign Envelope ID: FC20CC1D-27CE-4697-B47D-B02636483E86

EXHIBIT L

DOCUMENTS INCORPORATED FOR REFERENCE FROM RFP

[See Attached]

REMAINDER OF THIS PAGE LEFT INTENTIONALLY BLANK

DocuSign Envelope ID: FC20CC1D-27CE-4697-B47D-B02636483E86

CONSTRUCTION SERVICES AGREEMENT

BETWEEN

THE

HOUSING AUTHORITY OF THE CITY OF ALAMEDA,
A PUBLIC BODY, CORPORATE AND POLITIC

AND

_____

[CONTRACTOR NAME]
A_____

DocuSign Envelope ID: FC20CC1D-27CE-4697-B47D-B02636483E86

TABLE OF CONTENTS

Page

ARTICLE 1 PURPOSE; DEFINITIONS 1
Section 1.1 Purpose. 1
Section 1.2 Definitions. 1
Section 1.3 Exhibits. 4

ARTICLE 2 CONSTRUCTION SERVICES 5
Section 2.1 Scope of Work. 5
Section 2.2 Responsibility for Performance of the Work. 5
Section 2.3 Contractor Representations and Warranties. 6
Section 2.4 Subcontractors. 7
Section 2.5 Payment and Performance Bonds. 8
Section 2.6 Right of Entry; Job Site Facilities. 8
Section 2.7 Safety Precautions and Programs. 9
Section 2.8 Conditions Precedent to Commencement of the Work. 10
Section 2.9 Completion of the Work. 11
Section 2.10 Delay and Extension of Time. 12
Section 2.11 Change Orders. 12
Section 2.12 Work Pursuant to Permits, Plans and Laws. 13
Section 2.13 Authority's Right to Stop the Work. 14
Section 2.14 Authority's Right to Carry Out the Work. 14
Section 2.15 Section 3 Compliance. 15
Section 2.16 Equal Opportunity. 15
Section 2.17 Minority and Women-Owned Business Participation. 15
Section 2.18 Hazardous Materials. 15
Section 2.19 Insurance Requirements. 16
Section 2.20 Contractor's Obligations regarding Mechanic's Liens and Stop Notices. 16

ARTICLE 3 PAYMENT AND RECORD KEEPING REQUIREMENTS 17
Section 3.1 Contract Sum; Guaranteed Maximum Price. 17
Section 3.2 Conditions Precedent to Disbursement of Funds for the Work. 18
Section 3.3 Application for Payment Process. 18
Section 3.4 Conditions Precedent to Release of Retention Amount. 19
Section 3.5 Assignment of Claims by Contractor. 20
Section 3.6 Information. 21

ARTICLE 4 TERM; DEFAULT; REMEDIES 21
Section 4.1 Term. 21
Section 4.2 Events of Default by Contractor. 21
Section 4.3 Remedies. 22
Section 4.4 Remedies Cumulative. 23
Section 4.5 Termination for Convenience. 23

ARTICLE 5 PARTIES' DISPUTES 23
Section 5.1 Definition of Claim Governed by Dispute Clause. 23
Section 5.2 Applicability of Dispute Clause. 23
Section 5.3 Written Claims to be Submitted to Contracting Officer. 24

DocuSign Envelope ID: FC20CC1D-27CE-4697-B47D-B02636483E86

TABLE OF CONTENTS
(continued)

		Page
Section 5.4	Notice of Decision or Decision Date.	24
Section 5.5	Effect of Contracting Officer's Decision.	24
Section 5.6	Contractor's Duty to Perform Pending Claim Resolution	24
Section 5.7	Identification of Contracting Officer.	24
Section 5.8	Arbitration of Disputes.	24
Section 5.9	Situations when Arbitration Not Applicable	24
Section 5.10	Judgment on Final Award.	25
Section 5.11	Notice of Third-Party Claims.	25
ARTICLE 6 FEDERAL REQUIREMENTS		25
Section 6.1	Certain Requirements.	25
Section 6.2	Recordkeeping, Audit & Reporting Requirements	26
Section 6.3	Interest of Members of Congress.	27
Section 6.4	Interest of Member, Officer, or Employee and Former Member, Officer, or Employee of Authority.	27
Section 6.5	Lobbying Activities.	27
ARTICLE 7 GENERAL PROVISIONS		27
Section 7.1	Relationship of Parties.	27
Section 7.2	No Claims.	28
Section 7.3	Amendments.	28
Section 7.4	Indemnification.	28
Section 7.5	Non-Liability of Authority Officials, Employees and Agents.	29
Section 7.6	No Third Party Beneficiaries.	29
Section 7.7	Conflict of Interest	29
Section 7.8	Representatives; Authorization.	29
Section 7.9	Notices, Demands and Communications.	30
Section 7.10	Applicable Law.	30
Section 7.11	Parties Bound.	31
Section 7.12	Attorneys' Fees.	31
Section 7.13	Severability.	31
Section 7.14	Waivers.	31
Section 7.15	Title of Parts and Sections.	31
Section 7.16	Entire Understanding of the Parties	31
Section 7.17	Builder's Risk Insurance.	32
Section 7.18	Contractor Notifications.	32
Section 7.19	Time.	33
Section 7.20	Conflict Among Contract Documents.	33
Section 7.21	Multiple Originals; Counterpart.	33

Exhibit A: Scope of Work

Exhibit B: List of Subcontractors

DocuSign Envelope ID: FC20CC1D-27CE-4697-B47D-B02636483E86

TABLE OF CONTENTS
(continued)

Page

Exhibit C: Contractor Schedule of Values, Qualifications and Exclusions

Exhibit D: List of Plans

Exhibit E: General Conditions for Construction Contract (Form HUD-5370)

Exhibit F: Insurance Requirements

Exhibit G: Davis Bacon Wage Rates

Exhibit H: AHA Section 3 Policy

Exhibit I: Section 3 Certification

Exhibit J: Notice for Affirmative Action to Ensure Equal Employment Opportunity under Executive Order 11246, and the Standard Federal Equal Employment Opportunity Construction Contract Specifications

Exhibit K: Schedule

Exhibit L: Documents incorporated for reference from RFP